# Worm Gear Actuators

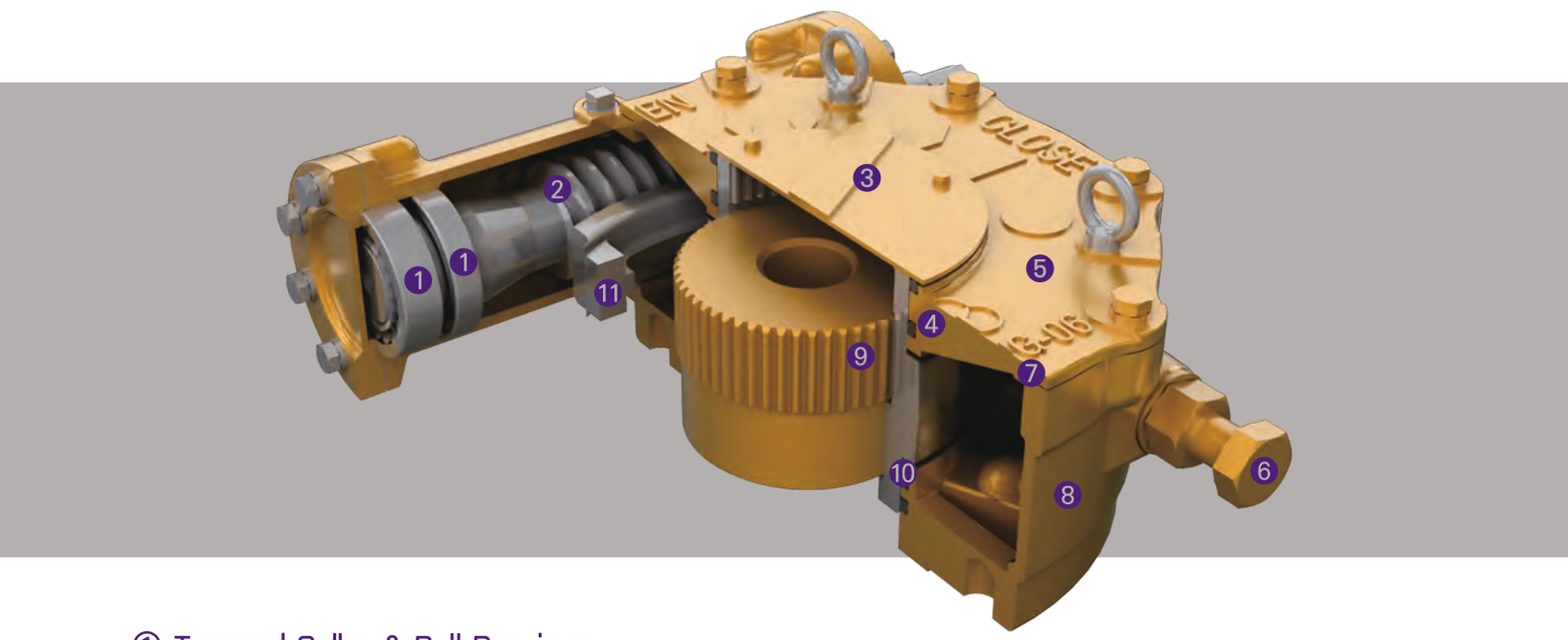


## ① Tapered Roller & Ball Bearings

The Worm is supported on tapered roller bearings which support both the axial and radial forces generated by the gearings.They have excellent load bearing capacity.

## ② Worm

1045 heat treated steel, with ground and polished worm threads. Precision cutting of the threads provides minimum backlash between the worm gearand worm.

## ③ Indicator Plate

Pointer provides positive position indication. The pointer can easily be re-positioned if required.

## ④ Sealing

The drive sleeve is supplied with a oil seal at the top and large cross-section o-ring at the bottom. This sealing method allows the units to be rated for submersible service to Ip67 standards.

## ⑤ Cover

Legends, 'Close-Open-Close' are cast directly on the cover.This permits operation in either direction with position indication.

## ⑥ External Adjustable Stops

The stop bolts allow for position accuracy of +/-5°.
Each bolt also includes Buna-N sealing washers or prevent water intrusion

Size and component specification in this catalogue are subject to change without prior notice for quality improvement.
* Mark has been changed and updated.

Global Leader
SAMBO
SPIRAL BEVEL GEAR ACTUATORS

## This series of Worm Gears range from 360N.m (260ft-lbf) to 970,000N.m (710,000 ft-lbf) >>>

Units are available with single, double and triple reduction spur gear.
Other options available are : vertical input

### ⑦ Gaskets

Each end of the worm assembly is equipped with special design material(non-asbestos), which are completely water resistant.

### ⑧ Housing

All external castings are Ductile Iron. Class 65-45-12, Tensile Strength of 65,000 psi.

### ⑨ Splined Bushings

All units furnished with removable splined bushings to permit accurate position between the gear drive and the valve shaft.

### ⑩ Thrust Washer

The drive sleeve is furnished with hardened steel thrust washers above and below warm gear.
This minuimizes frictional looseness between the gear and the ductile iron castings.

### ⑪ Worm Gear

Standard material is Ductile Iron, Grade 80-55-06, Suitable most industrial applications.
Option is aluminum bronze having a tensile strength of 85,000 psi.
Normally required for motorized applications involving modulating service and is also a requirement to meet the AWWA standards.



Size and component specification in this catalogue are subject to change without prior notice for quality improvement.
* Mark has been changed and updated.

# Worm Gear Actuator Assembly

## STANDARD TYPE - A

### Horizontal Input

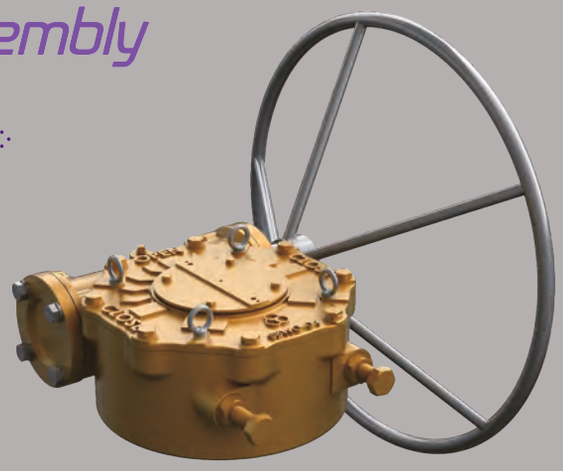

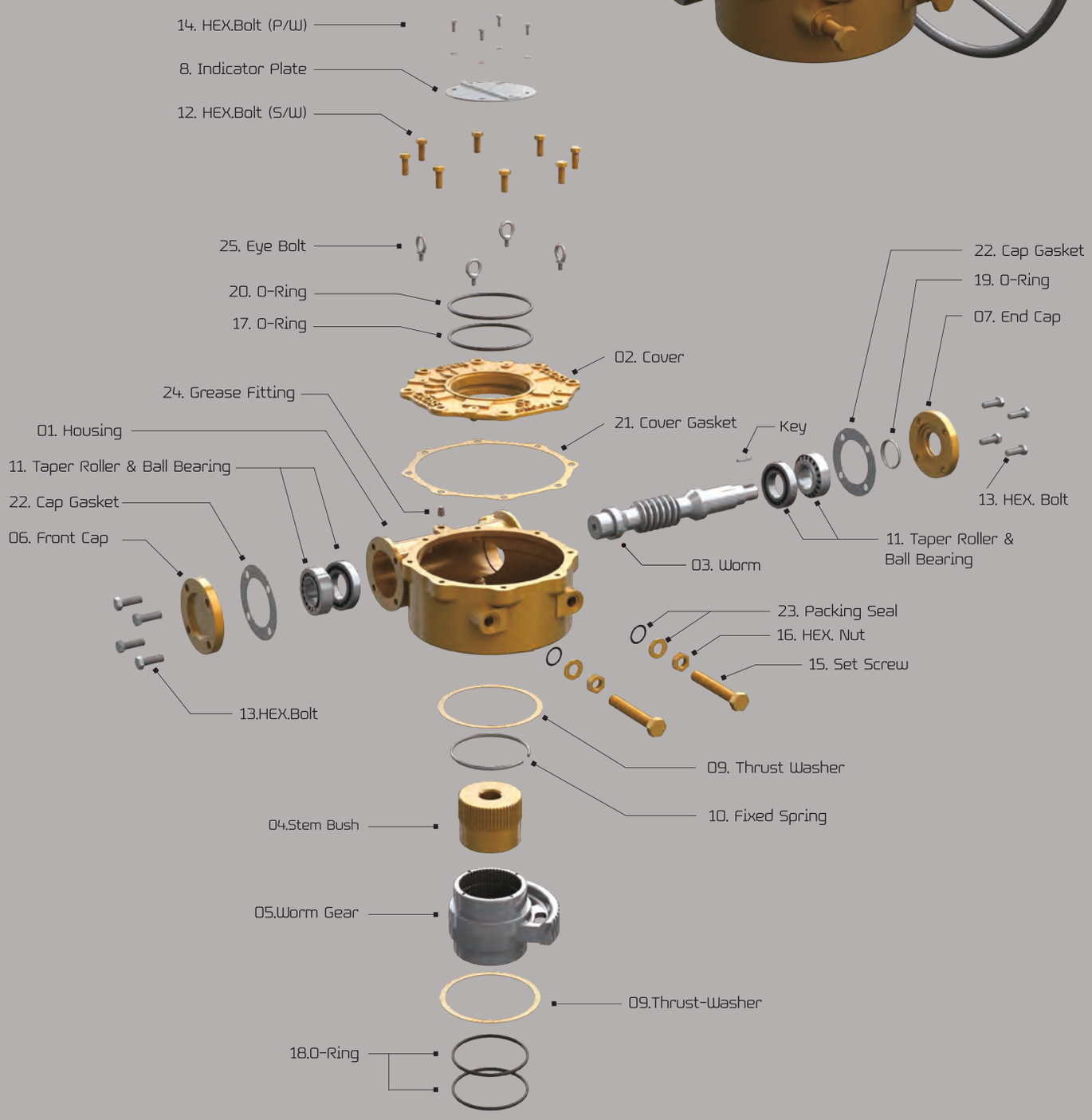


Worm Gear

Size and component specification in this catalogue are subject to change without prior notice for quality improvement.
* Mark has been changed and updated.

# Part List & Material >>>

| | NO | DESCRIPTION | MATERIAL | | | REMARK |
|---|---|---|---|---|---|---|
| | | | NAME | JIS | ASTM | |
| STANDARD | 1 | Housing | Ductile Iron | FCD–450 | A536–65–45–12 | NOTE. 1 |
| | 2 | Cover | Ductile Iron | FCD–450 | A536–65–45–12 | NOTE. 1 |
| | 3 | Worm | Carbon Steel | S45C | A576–1045 | NOTE. 2 |
| | 4 | Stem Bush | Ductile Iron | FCD–450 | A536–65–45–12 | |
| | 5 | Worm Gear | Ductile Iron | FCD–600 | A536–80–55–06 | B148–C95800(ALBC3) |
| | 6 | Front Cap | Ductile Iron | FCD–450 | A536–65–45–12 | |
| | 7 | End Cap | Ductile Iron | FCD–450 | A536–65–45–12 | |
| | 8 | Indicator Plate | Steel + EP | | | |
| | 9 | Thrust Washer | Steel | | | |
| | 10 | Fixed Spring | Steel | | | |
| | 11 | Taper Roller & Ball Bearing | Special Steel | SUJ2 | A295–52100 | |
| | 12 | HEX. Bolt | Alloy Steel | SCM435 | A322–4135 | |
| | 13 | HEX. Bolt | Alloy Steel | SCM435 | A322–4135 | |
| | 14 | HEX. Bolt (P/W) | Stainless Steel | | | |
| | 15 | Set Screw | Carbon Steel | S45C | A576–1045 | |
| | 16 | HEX. Nut | Carbon Steel | S45C | A576–1045 | |
| | 17 | O–Ring | Silicon | | | NOTE. 4 |
| | 18 | O–Ring | Silicon | | | |
| | 19 | O–Ring | Silicon | | | |
| | 20 | O–Ring | Silicon | | | |
| | 21 | Cover Gasket | Non – Asbestos | | | VALQUA 6601 |
| | 22 | Cap Gasket | Non – Asbestos | | | |
| | 23 | Packing Seal | Silicon | | | |
| | 24 | Grease Fitting | Steel + Galvanizing | | | |
| | 25 | Eye Bolt | Steel + Galvanizing | | | |
| OPTION | OP–01. | Hand Wheel | Steel Pipe | SGP | A53 | HANDLE PART NOTE. 5 |
| | OP–02. | Key | Carbon Steel | S45C | A576–1045 | |
| | OP–03. | Name Plate | Stainless Steel | | | |
| | OP–04. | Washer | Stainless Steel | | | |
| | OP–05. | HEX.Bolt (S/W) | Stainless Steel | | | |

# Material Detail : Option and Material Changes >>>

1. All castings are Ductile Iron, FCD-450 (ASTM Class 65-45-12)
2. In case of option for special request, it can be worked Nickel coating, high tensile stainless.
3. Also, the material can be changed as ALBC3(Aluminium Bronze), steel(A576-1045), A439 Gr D2C (Austenitic ductile iron casting) and etc.
4. O-Ring Seal & Lubricant : Standard is Silicon & Buna "N", temperature range -20° C to +120° C (-4° F to +248° F).
   Standard lubricant is Zenith EPSB 2, temperature Range -20° C to +200° C (-4° F to +392° F).
   Other option are : High Temperature Viton O-Ring Grade V75, Temperature Range -30° C to +200° C (-22° F to +392° F)
   Lubricant - Zenith SYN WS2 Temperature Range -30° C~400° C (-22° F~752° F)
   Low Temperature Silicon O-Ring, Temperature Range -60° C to + 150° C(-76° F to 302° F)
   Lubricant - Zenith SBLT600, Temperature Range -60° C~120° C (-76° F~248° F)
5. SAMBO offers a wide variety of Handwheels, Chainwheels, Input Shaft, Locking Devices and etc.
6. SAMBO offers a wide variety of stem cover, stainless steel, Polycarbonate.
   Paint : Unless specified, units are supplied with vp134 Red epoxy primer. SAMBO can provide finish coating upon request.

The World's Highest Quality! Global Leader SAMBO SPIRAL BEVEL GEAR ACTUATORS

Size and component specification in this catalogue are subject to change without prior notice for quality improvement.
* Mark has been changed and updated.

# Worm Gear Actuator Assembly

## STANDARD TYPE – A

### Horizontal Input
### with Single Reduction Gear Attachment

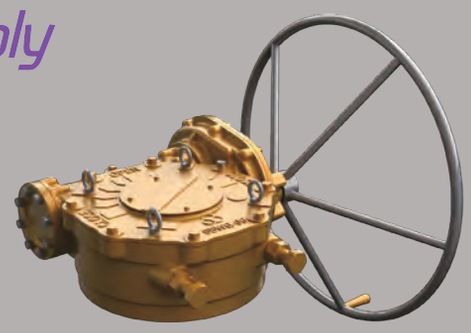

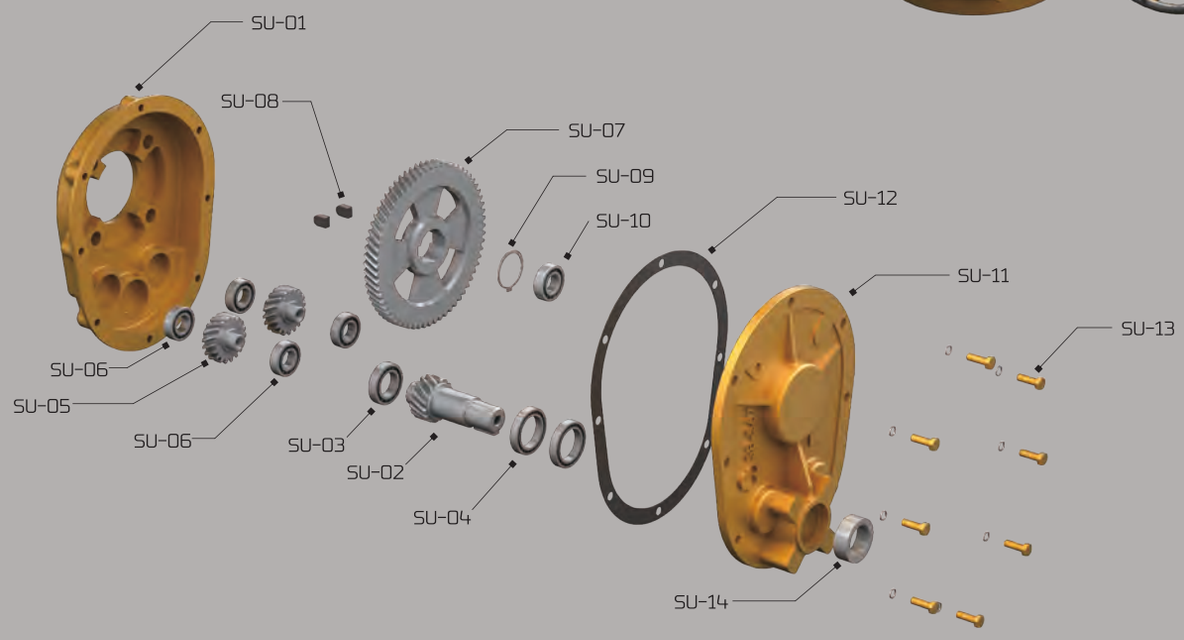


## Part List & Material >>>

| NO | DESCRIPTION | MATERIAL | | | REMARK |
|---|---|---|---|---|---|
| | | NAME | JIS | ASTM | |
| 1 | Housing | Ductile Iron | FCD–450 | A536–65–45–12 | NOTE. 1 |
| 2 | Cover | Ductile Iron | FCD–450 | A536–65–45–12 | NOTE. 1 |
| 3 | Worm | Carbon Steel | S45C | A576–1045 | NOTE. 2 |
| 4 | Stem Bush | Ductile Iron | FCD–450 | A536–65–45–12 | |
| 5 | Worm Gear | Ductile Iron | FCD–600 | A536–80–55–06 | B148–C95800(ALBC3) |
| 6 | Front Cap | Ductile Iron | FCD–450 | A536–65–45–12 | |
| 7 | End Cap | Ductile Iron | FCD–450 | A536–65–45–12 | |
| 8 | Indicator Plate | Steel + EP | | | |
| 9 | Thrust Washer | Steel | | | |
| 10 | Fixed Spring | Steel | | | |
| 11 | Taper Roller Bearing | Special Steel | SUJ2 | A295–52100 | |
| 12 | HEX. Bolt (S/W) | Alloy Steel | SCM435 | A322–4135 | |
| 13 | HEX. Bolt | Alloy Steel | SCM435 | A322–4135 | |
| 14 | HEX. Bolt (P/W) | Stainless Steel | | | |
| 15 | Set Screw | Carbon Steel | S45C | A576–1045 | |
| 16 | HEX. Nut | Carbon Steel | S45C | A576–1045 | |
| 17 | O–Ring | Silicon | | | NOTE. 3 |
| 18 | O–Ring | Silicon | | | |
| 19 | O–Ring | Silicon | | | |
| 20 | O–Ring | Silicon | | | |
| 21 | Cover Gasket | Non – Asbestos | | | VALQUA 6601 |
| 22 | Cap Gasket | Non – Asbestos | | | |

| NO | DESCRIPTION | MATERIAL | | | REMARK |
|---|---|---|---|---|---|
| | | NAME | JIS | ASTM | |
| 23 | Packing Seal | Silicon | | | |
| 24 | Grease Fitting | Steel + Galvanizing | | | |
| 25 | Eye Bolt | Steel + Galvanizing | | | |
| SU–01 | Support Housing | Ductile Iron | FCD–450 | A536–65–45–12 | |
| SU–02 | Helical Pinion | Carbon Steel | S45C | A576–1045 | |
| SU–03 | Radial Ball B/R | Special Steel | SUJ2 | A295–52100 | |
| SU–04 | Radial Ball B/R | Special Steel | SUJ2 | A295–52100 | |
| SU–05 | Idle Gear | Carbon Steel | S45C | A576–1045 | |
| SU–06 | Radial Ball B/R | Speciial Steel | SUJ2 | A295–52100 | |
| SU–07 | Helical Gear | Carbon Steel | S45C | A576–1045 | |
| SU–08 | Key (1R) | Carbon Steel | S45C | A576–1045 | |
| SU–09 | Snap Ring | Carbon Steel | S45C | A576–1045 | |
| SU–10 | Radial Ball B/R | Special Steel | SUJ2 | A295–52100 | |
| SU–11 | Support Cover | Ductile Iron | FCD–450 | A536–65–45–12 | |
| SU–12 | S–Cover Gasket | Nonasbestos | | | VALQUA6601 |
| SU–13 | HEX.Bolt (S/W) | Alloy Steel | SCM435 | A322–4135 | |
| SU–14 | Oil–Seal | Buna N | NBR | | |
| OP–01 | Hand Wheel | Steel Pipe | SGP | A53 | OPTION HANDLE PART |
| OP–02 | Key(1R) | Carbon Steel | S45C | A576–1045 | |
| OP–03 | Name Plate | Stainless Steel | | | |
| OP–04 | Washer | Stainless Steel | | | |
| OP–05 | HEX. Bolt (S/W) | Stainless Steel | | | |

Size and component specification in this catalogue are subject to change without prior notice for quality improvement.
* Mark has been changed and updated.

# STANDARD TYPE – A

## Horizontal Input
## with Double Reduction Gear Attachment

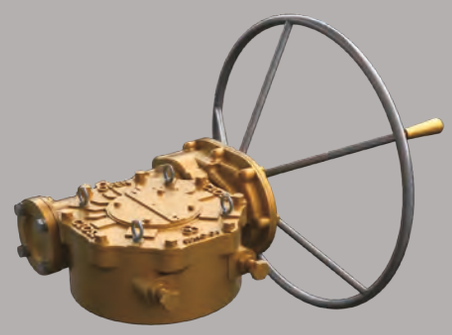

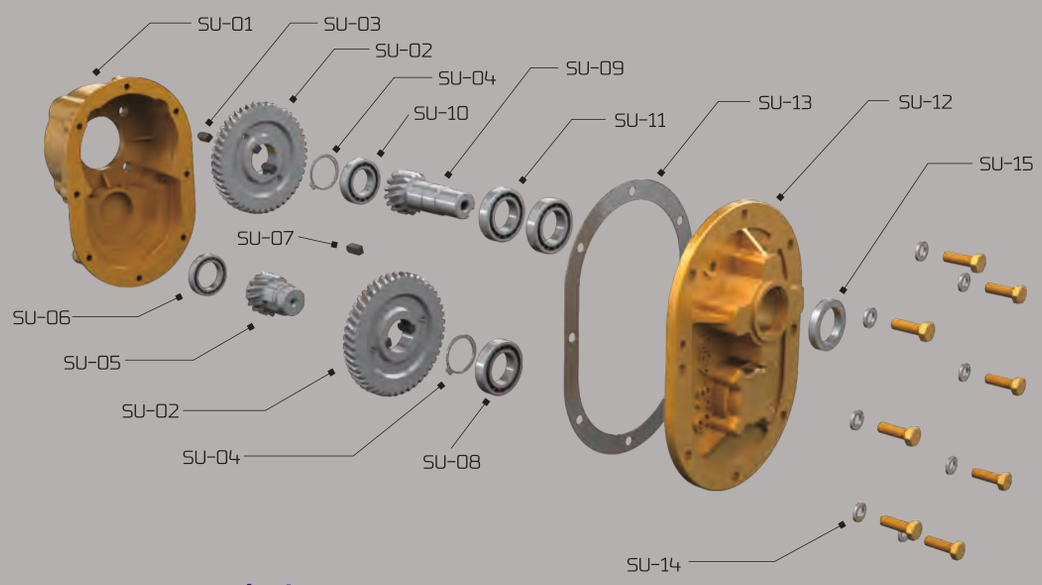


## Part List & Material >>>

| NO | DESCRIPTION | MATERIAL | | | REMARK |
|---|---|---|---|---|---|
| | | NAME | JIS | ASTM | |
| 1 | Housing | Ductile Iron | FCD–450 | A536–65–45–12 | NOTE. 1 |
| 2 | Cover | Ductile Iron | FCD–450 | A536–65–45–12 | NOTE. 1 |
| 3 | Worm | Carbon Steel | S45C | A576–1045 | NOTE. 2 |
| 4 | Stem Bush | Ductile Iron | FCD–450 | A536–65–45–12 | |
| 5 | Worm Gear | Ductile Iron | FCD–600 | A536–80–55–06 | B148–C95800(ALBC3) |
| 6 | Front Cap | Ductile Iron | FCD–450 | A536–65–45–12 | |
| 7 | End Cap | Ductile Iron | FCD–450 | A536–65–45–12 | |
| 8 | Indicator Plate | Steel + EP | | | |
| 9 | Thrust Washer | Steel | | | |
| 10 | Fixed Spring | Steel | | | |
| 11 | Taper Roller Bearing | Special Steel | SUJ2 | A295–52100 | |
| 12 | HEX. Bolt (S/W) | Alloy Steel | SCM435 | A322–4135 | |
| 13 | HEX. Bolt | Alloy Steel | SCM435 | A322–4135 | |
| 14 | HEX. Bolt (P/W) | Stainless Steel | | | |
| 15 | Set Screw | Carbon Steel | S45C | A576–1045 | |
| 16 | HEX. Nut | Carbon Steel | S45C | A576–1045 | |
| 17 | O–Ring | Silicon | | | NOTE. 3 |
| 18 | O–Ring | Silicon | | | |
| 19 | O–Ring | Silicon | | | |
| 20 | O–Ring | Silicon | | | |
| 21 | Cover Gasket | Non – Asbestos | | | VALQUA 6601 |
| 22 | Cap Gasket | Non – Asbestos | | | |

| NO | DESCRIPTION | MATERIAL | | | REMARK |
|---|---|---|---|---|---|
| | | NAME | JIS | ASTM | |
| 23 | Packing Seal | Silicon | | | |
| 24 | Grease Fitting | Steel + Galvanizing | | | |
| 25 | Eye Bolt | Steel + Galvanizing | | | |
| SU–01 | Support Housing | Ductile Iron | FCD–450 | A536–65–45–12 | |
| SU–02 | Helical Gear | Carbon Steel | S45C | A576–1045 | |
| SU–03 | Key (1R) | Carbon Steel | S45C | A576–1045 | |
| SU–04 | Snap Ring | Carbon Steel | S45C | A576–1045 | |
| SU–05 | Idle Gear | Carbon Steel | S45C | A576–1045 | |
| SU–06 | Radial Ball B/R | Special Steel | SUJ2 | A295–52100 | |
| SU–07 | Key (1R) | Carbon Steel | S45C | A576–1045 | |
| SU–08 | Radial Ball B/R | Special Steel | SUJ2 | A295–52100 | |
| SU–09 | Helical Pinion | Carbon Steel | S45C | A576–1045 | |
| SU–10 | Radial Ball B/R | Special Steel | SUJ2 | A295–52100 | |
| SU–11 | Radial Ball B/R | Special Steel | SUJ2 | A295–52100 | |
| SU–12 | Support Cover | Ductile Iron | FCD–450 | A536–65–45–12 | |
| SU–13 | S–Cover Gasket | Nonasbestos | | | VALQUA6601 |
| SU–14 | HEX. Bolt (S/W) | Stainless | SCM435 | A322–4135 | |
| SU–15 | Oil–Seal | Buna N | NBR | | |
| OP–01 | Hand Wheel | Steel Pipe | SGP | A53 | OPTION HANDLE PART |
| OP–02 | Key (1R) | Carbon Steel | S45C | A576–1045 | |
| OP–03 | Name Plate | Stainless Steel | | | |
| OP–04 | Washer | Stainless Steel | | | |
| OP–05 | HEX. Bolt (S/W) | Stainless Steel | | | |

Size and component specification in this catalogue are subject to change without prior notice for quality improvement.
* Mark has been changed and updated.

SAMBO

# INDEX


## Etc.

Hand Wheel Type & Chain Wheel Type 098 · 099
Bush Insert & Setscrew / Twin Shaft Gear Actuator Type 100 · 101

## A

Standard Type A
Horizontal Input 102 · 103
Standard Type A
Horizontal Input with Single Reduction Gear Attachment 104 · 105
Standard Type A - Twin Shaft
Horizontal Input with Single Reduction Gear Attachment 106 · 107
Standard Type A
Horizontal Input with Double Reduction Gear Attachment 108 · 109
Standard Type A -Twin Shaft
Horizontal Input with Double Reduction Gear Attachment 110 · 111
Standard Type A
Horizontal Input with Triple Reduction Gear Attachment 112 · 113

## B

Standard Type B
Vertical Input with Double Reduction Gear Attachment 114 · 115
Standard Type B
Vertical Input with Triple Reduction Gear Attachment 116 · 117
Standard Type B
Vertical Input with Single Reduction Gear Attachment 118 · 119

## C·E

Standard Type C
Horizontal Input with Double Reduction Gear Attachment 120 · 121
Standard Type E
Vertical Input with Single Reduction Gear Attachment 122 · 123
Standard Type E
Vertical Input with Double Reduction Gear Attachment 124 · 125

## Part Turn

Part Turn 135˚
Horizontal Input 126 · 127
Part Turn 135˚
Horizontal Input with Single Reduction Gear Attachment 128 · 129
Part Turn 135˚
Horizontal Input with Double Reduction Gear Attachment 130 · 131
Part Turn 180˚
Horizontal Input 132 · 133
Part Turn 180˚
Horizontal Input with Single Reduction Gear Attachment 134 · 135
Part Turn 180˚
Horizontal Input with Double Reduction Gear Attachment 136 · 137
Part Turn - 45˚, 90˚, 135˚, 180˚, 225˚, 270˚, 360˚
Horizontal Input 138 · 139
Declutch Gear - 45˚, 90˚, 135˚, 180˚, 225˚, 270˚, 360˚
Horizontal Input with Single Reduction Gear Attachment 140 · 141
Declutch Gear - 45˚, 90˚, 135˚, 180˚, 225˚, 270˚, 360˚
Horizontal Input with Double Reduction Gear Attachment 142 · 143

## Multi Turn

Multi Turn 360˚
Horizontal Input 144 · 145
Multi Turn 360˚
Horizontal Input with Single Reduction Gear Attachment 146 · 147
Multi Turn 360˚
Horizontal Input with Double Reduction Gear Attachment 148 · 149

## Declutch Gear

Declutch Gear
Horizontal Input 150 · 151
Declutch Gear
Horizontal Input with Single Reduction Gear Attachment 152 · 153
Declutch Gear
Horizontal Input with Triple Reduction Gear Attachment 154 · 155
Declutch Gear - Pneumatic Actuators
Horizontal Input 156 · 157
Declutch Gear - Pneumatic Actuators
Horizontal Input with Single Reduction Gear Attachment 158 · 159
Declutch Gear - Pneumatic Actuators
Horizontal Input with Double Reduction Gear Attachment 160 · 161


Size and component specification in this catalogue are subject to change without prior notice for quality improvement.
* Mark has been changed and updated.

# PRODUCTS

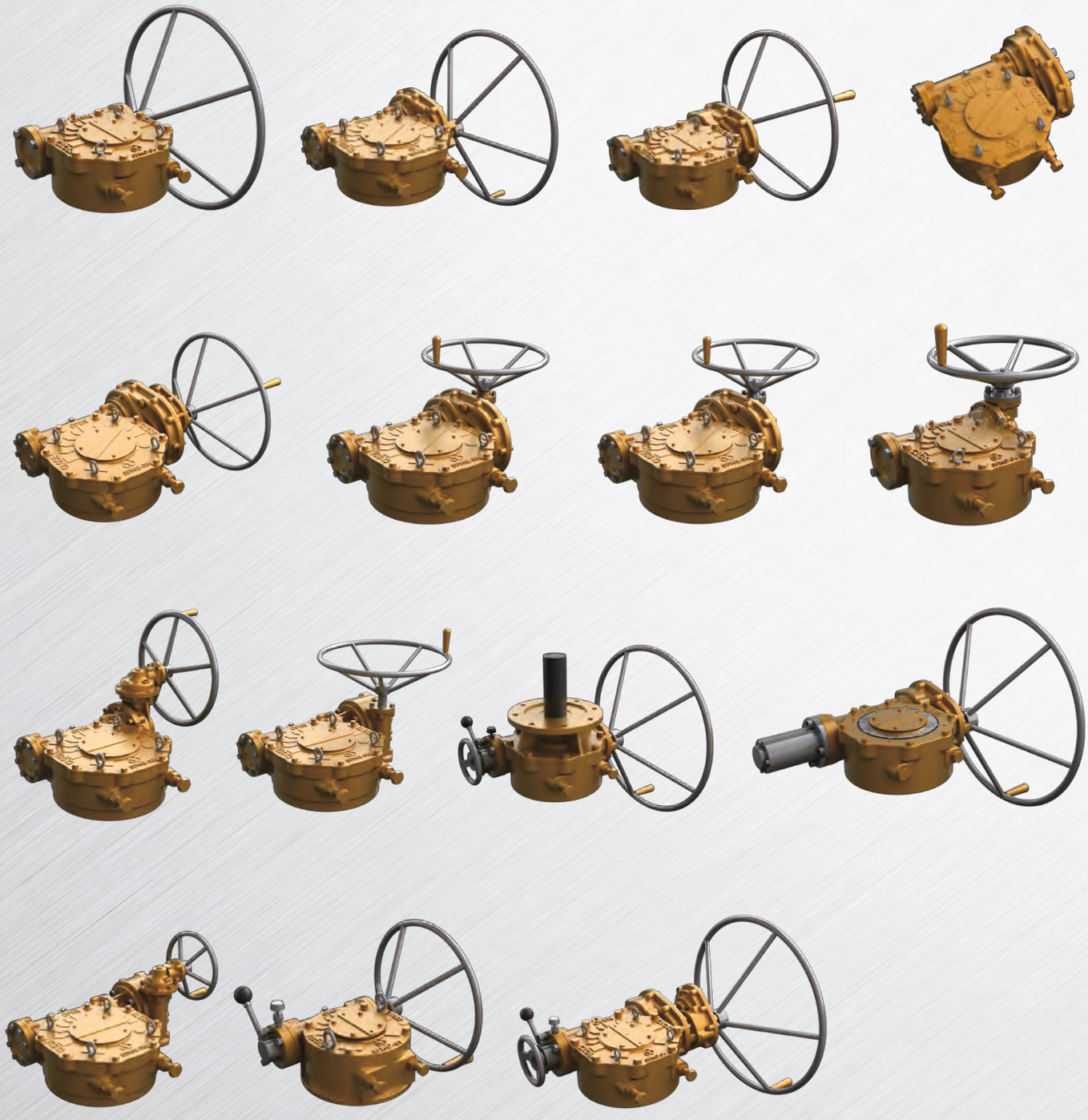



Global Leader
SAMBO
GEAR ACTUATORS for Industrial Valves

## The World's Highest Quality!

Size and component specitication in this catalogue are subject to change without prior notice for quality improvement.
* Mark has been changed and updated.

# Hand Wheel Type

## Worm Standard Handwheel >>>

UNIT : mm

| SIZE / MODEL | ΦO.D | ΦD | Φd&KEY | L | L1 | ARM Q'TY |
|---|---|---|---|---|---|---|
| WH-200 | 200 | 40 | Ø16 (6X6) | 25 | 70 | 3EA |
| WH-250 | 250 | | | | 90 | |
| WH-300 | 300 | 50 | Ø21 (6X6) | 30 | 110 | 4EA |
| WH-350 | 350 | | | | 120 | |
| WH-400 | 400 | | | | 130 | |
| WH-450 | 450 | 60 | Ø26 (8X7) | 35 | 150 | |
| WH-500 | 500 | | | | 160 | 5EA |
| WH-560 | 560 | | | | 170 | |
| WH-630 | 630 | 70 | Ø32 (10X8) | 35 | 190 | |
| WH-710 | 710 | | | | 210 | |
| WH-800 | 800 | 80 | Ø38 (12X8) | 45 | 230 | 6EA |
| WH-900 | 900 | | | | 250 | |
| WH-1000 | 1000 | 90 | Ø50 (16X10) | 59 | 270 | |

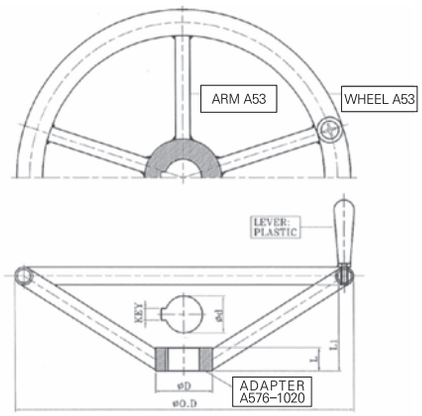


If there is no request from customers, we will make handwheel as per the above table.
As option, the material can be changed and Handwheel size can be suitable for all model.

## Worm Solid Handwheel >>>

UNIT : mm

| SIZE / MODEL | ΦO.D | ΦD | Φd&KEY | L | L1 | ARM Q'TY |
|---|---|---|---|---|---|---|
| WSH-200 | 200 | 40 | Ø16 (6X6) | 25 | 70 | 3EA |
| WSH-250 | 250 | | | | 90 | |
| WSH-300 | 300 | 50 | Ø21 (6X6) | 30 | 110 | 4EA |
| WSH-350 | 350 | | | | 120 | |
| WSH-400 | 400 | | | | 130 | |
| WSH-450 | 450 | 60 | Ø26 (8X7) | 35 | 150 | |
| WSH-500 | 500 | | | | 160 | 5EA |
| WSH-560 | 560 | | | | 170 | |
| WSH-630 | 630 | 70 | Ø32 (10X8) | 35 | 190 | |
| WSH-710 | 710 | | | | 210 | |
| WSH-800 | 800 | 80 | Ø38 (12X8) | 45 | 230 | 6EA |
| WSH-900 | 900 | | | | 250 | |
| WSH-1000 | 1000 | 90 | Ø50 (16X10) | 59 | 270 | |

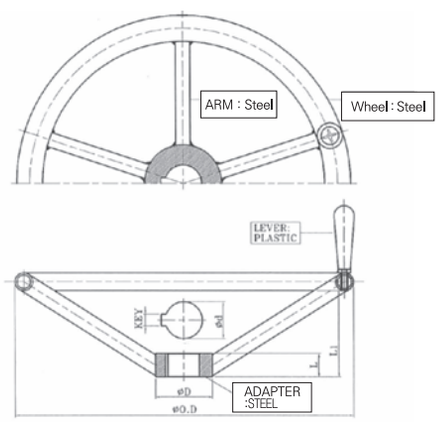


If there is no request from customers, we will make handwheel as per the above table.
As option, the material can be changed and Handwheel size can be suitable for all model.

## 2" SQUARE NUT Handwheel >>>

UNIT : mm

| SIZE / MODEL | ΦO.D | ΦD | Φd&KEY | L | L1 | ARM Q'TY |
|---|---|---|---|---|---|---|
| WDNH-200 | 200 | 90 | Ø16 (6X6) | 25 | 70 | 3EA |
| WDNH-250 | 250 | | | | 90 | |
| WDNH-300 | 300 | | Ø21 (6X6) | 30 | 110 | 4EA |
| WDNH-350 | 350 | | | | 120 | |
| WDNH-400 | 400 | | | | 130 | |
| WDNH-450 | 450 | | Ø26 (8X7) | 35 | 150 | |
| WDNH-500 | 500 | | | | 160 | 5EA |
| WDNH-560 | 560 | | | | 170 | |
| WDNH-630 | 630 | | Ø32 (10X8) | | 190 | |
| WDNH-710 | 710 | | | | 210 | |
| WDNH-800 | 800 | | Ø38 (12X8) | | 230 | 6EA |
| WDNH-900 | 900 | | | | 250 | |
| WDNH-1000 | 1000 | | Ø50 (16X10) | 70 | 270 | |

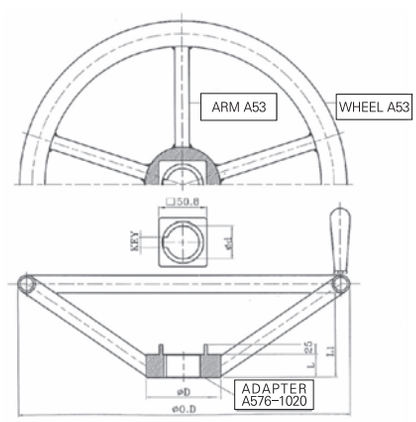


This Handwheel is the type using air impact wrench and if can be made properly according to customer' s request.

Size and component specification in this catalogue are subject to change without prior notice for quality improvement.
* Mark has been changed and updated.

# Chain Wheel Type

## WORM Standard >>>

UNIT : mm

| SIZE / MODEL | A | B | ΦD & KEY |
|---|---|---|---|
| CH-200 | 200 | 43 | Φ16 (6X6)<br>Φ21 (6X6) |
| CH-250 | 250 | | |
| CH-300 | 300 | 43.5 | Φ26 (8X7)<br>Φ32 (10X8) |
| CH-350 | 350 | | |
| CH-400 | 400 | 50 | Φ38 (12X8) |
| CH-450 | 450 | | |
| CH-500 | 500 | | |
| CH-550 | 550 | | |
| CH-600 | 600 | | |
| CH-700 | 700 | 51.5 | Φ38 (12X8)<br>Φ50 (16X10) |
| CH-800 | 800 | 53 | |

## Gear Type >>>

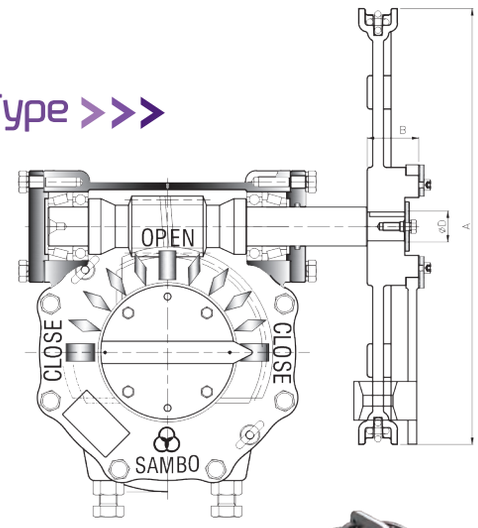


## Hammer Type >>>

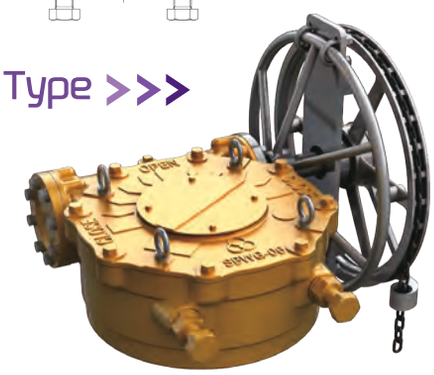

### Chainwheel has 2 types

- First, hammer type which is joined with handwheel.
- Second, gear type which is adhered to gear directly.
- material : sprocket rim (FCD-450), guide arm (FCD-450), chain (steel+zn)

## Square Adapter >>>

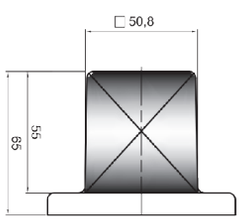


2" Square Nut Adapter

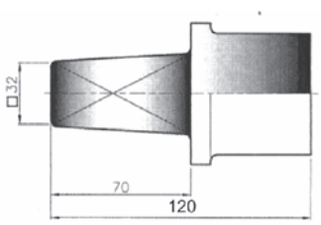


32 Square Nut Adapter

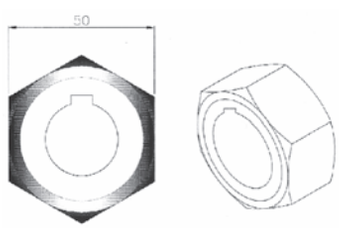


Hexagon Adapter

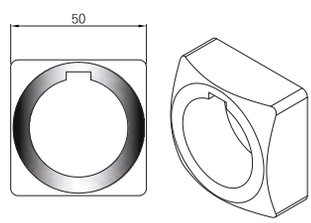


2" Square Nut

## Handwheel Selection Chart >>>

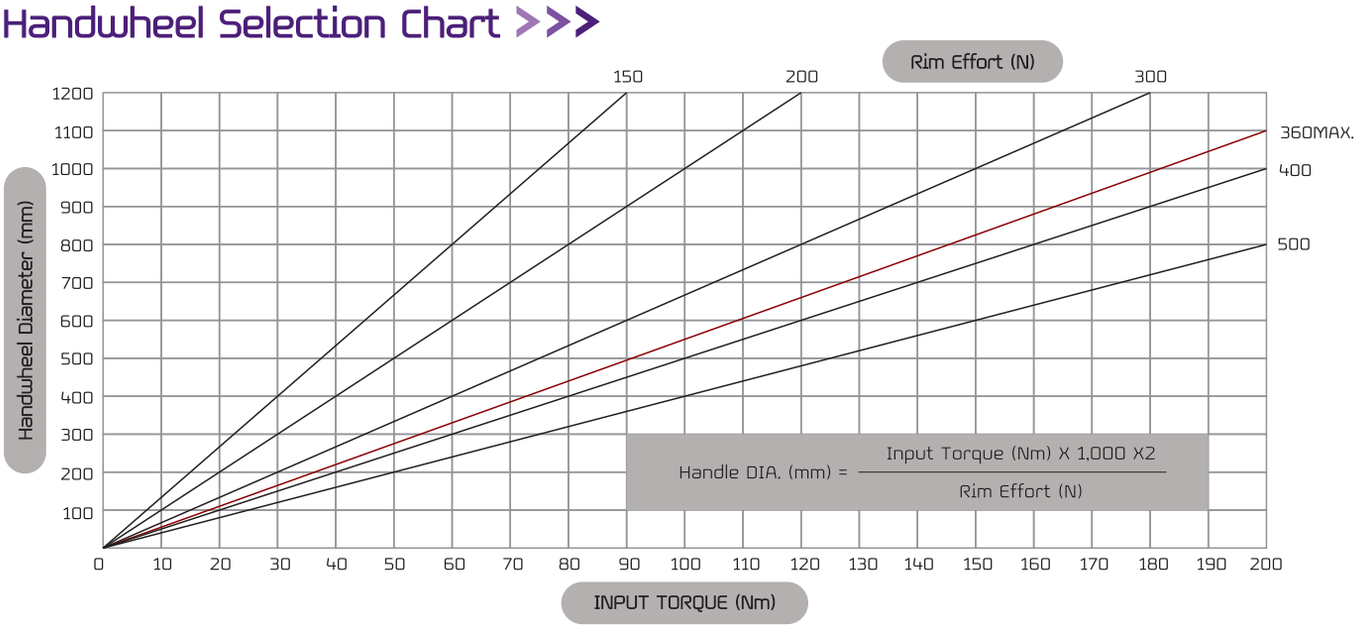


Size and component specification in this catalogue are subject to change without prior notice for quality improvement.
* Mark has been changed and updated.

# The Following Instructions should be followed for mounting of the gear to the valve

## BUSH INSERT & SETSCREW >>>

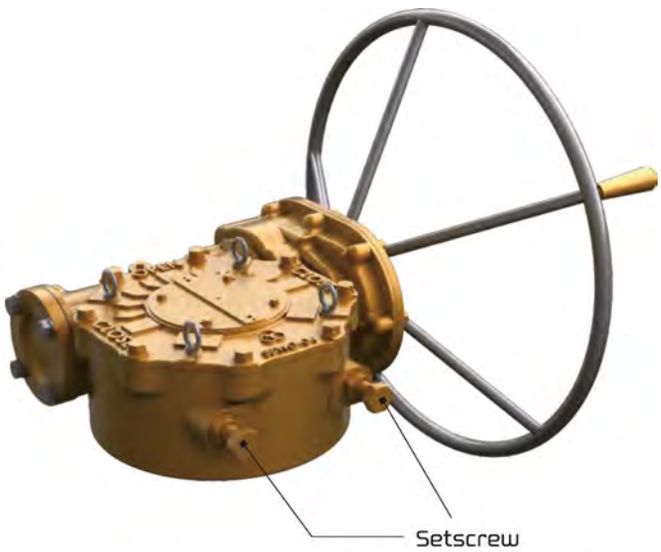


### Bottom Entry

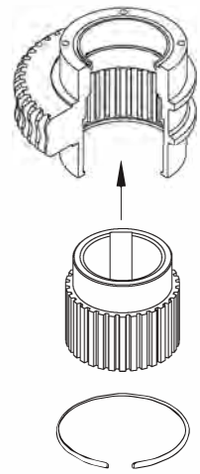

SBWG-0 ~ 35 Series

### Upper Entry

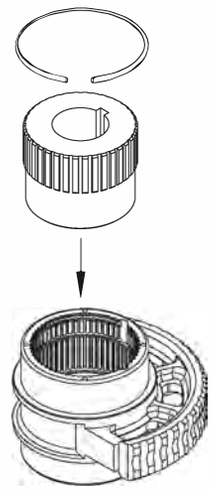

SBWG-04 ~ 13 Series

### Stem Bush

### Worm Gear

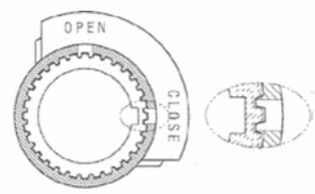


• If it does not match, the position may not be proper.

## ADJUSTMENT OF SETSCREW >>>

1. Secure setting for the valve and actuator correctly.
2. After finish setting, finally use to adjust the setscrews of worm gearbox.

### WARNING

- SAMBO worm gearboxes are not set at exactly 90 degree.
- After complete valve and actuator, accurately adjust and use setscrews.
- Incorrect setting of setscrews may cause damage and user is responsible for this.

## BUSH INSERT >>>

### Assembly

1. Turn gear box to see bottom side.
2. Insert bush correctly into the worm gear.
   Insert bush into grooves of worm gear.
   (Match groove and bushing key in a straight line.)
   There is 2 grooves at bottom of worm gear.
   One groove is for open and the other is for close.
3. Fix spring.

### CAUTION

- In case of bushing insert, match groove of worm gear and bushing key correctly.
- This groove is marked the position of Caution "Close" or "Open".
- If it does not match, the position may not be proper.

SAMBO
The World's Highest Quality!

Worm Gear

Size and component specification in this catalogue are subject to change without prior notice for quality improvement.
* Mark has been changed and updated.

# Chain Wheel Type

## Twin Shaft Gear Actuators Type >>>

There are two input shafts in the below support actuator type. One Shaft is for high speed and the other shaft is for low speed.

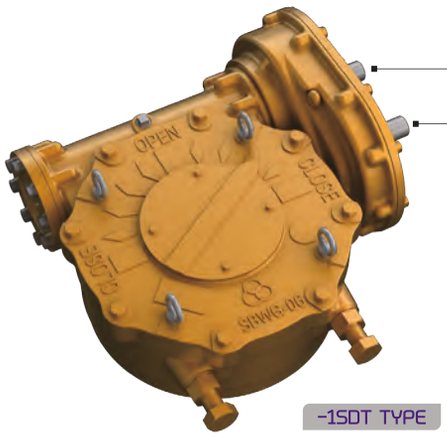


-1SDT TYPE

**Second Input Shaft (Low Speed Input Shaft)**

Provides maximum mechanical advantage for seating and unseating of valves.

**Primary Input Shaft (High Speed Input Shaft)**

Allow for less turns after valve has been unseating.

## Input / Output Shaft Rotation Options >>>

### Right Hand Input

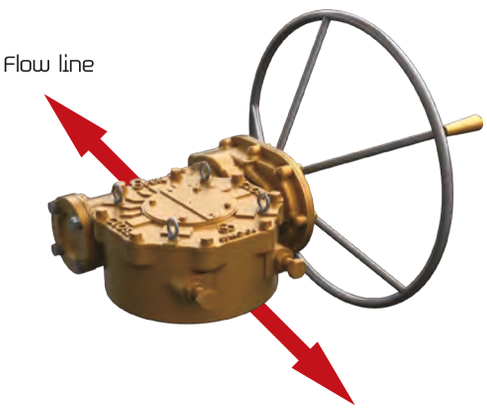


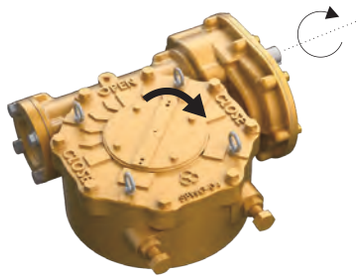

① Right Hand Input
CW in- CW out is most standard
Assembly position "A"

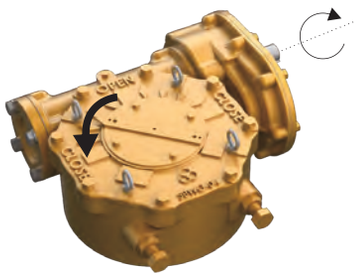

② Right Hand Input
CW in- CCW out Assembly
position "B"

### Left Hand Input

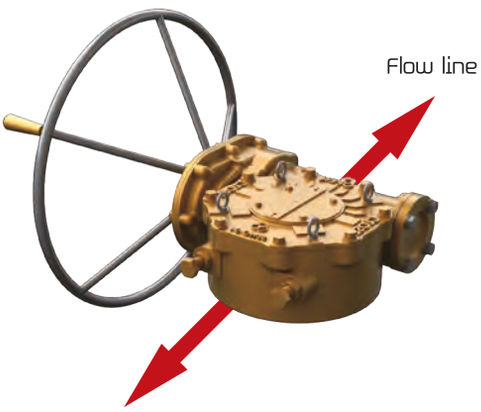


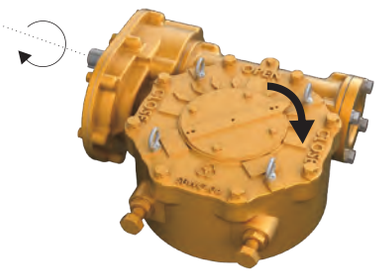

③ Left Hand Input
CW in- CW out is most standard
Assembly position "C"

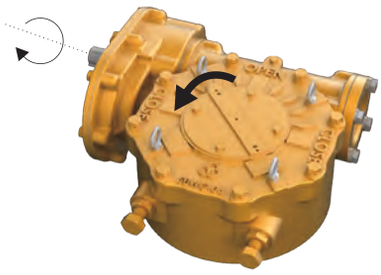

④ Left Hand Input
CW in- CCW out Assembly
position "D"

Size and component specification in this catalogue are subject to change without prior notice for quality improvement.
* Mark has been changed and updated.

# STANDARD TYPE-A

## Horizontal Input

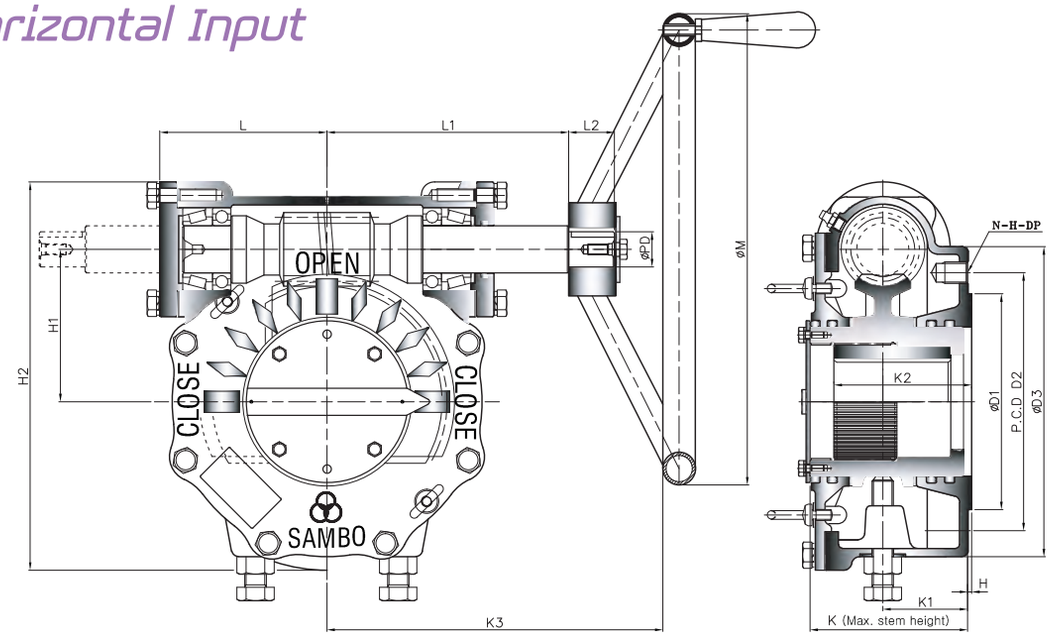


• Pin hole size is same as tap out diameter

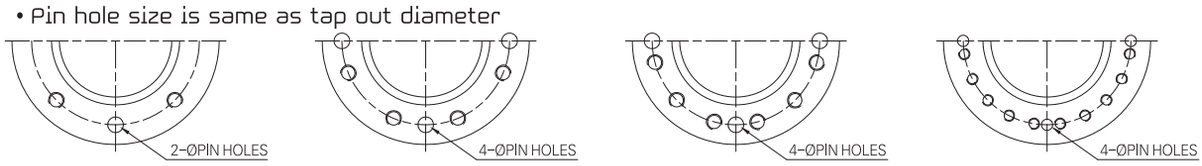


TYPE - A TYPE - B TYPE - C TYPE - D

## Dimension >>>

UNIT : mm

| DIM / MODEL | BASE PART | | | | | | | EXTERNAL PART | | | | | | | | INPUT SHAFT PART | | | HAND WHEEL |
|---|---|---|---|---|---|---|---|---|---|---|---|---|---|---|---|---|---|---|---|
| | TYPE | FLANGE | ØD1 | P.C.D ØD2 | P.C.D N-H-DP | ØD3 | H | H1 | H2 | K | K1 | K2 | K3 | L | L1 | L2 | ØPD | KEY | |
| * SBWG-BF | A | F-07 | 55 | 70 | 4-M8-12 | 110 | 2 | 42 | 132 | 76 | 38 | 38.6 | 150 | 64 | 97 | 24 | 16 | 6X6 | 200 |
| SBWG-0 | | F-10 | 70 | 102 | 4-M10-15 | 135 | | 57 | 159.5 | 77 | 38 | 43.6 | 177 | 71.5 | 104.5 | | | | 250 |
| SBWG-00 | | F-12 | 85 | 125 | 4-M12-18 | 165 | | 69.5 | 192 | 86.5 | 43 | 53.6 | 230 | 86 | 138 | 29 | 21 | 6X6 | 300 |
| SBWG-01 | | F-14 | 100 | 140 | 4-M16-24 | 190 | | 82.5 | 217.5 | 96 | 53 | 65 | 260 | 95 | 147 | | | | 400 |
| SBWG-02 | | F-16 | 130 | 165 | 4-M20-30 | 220 | | 97 | 257 | 111.5 | 58 | 75.5 | 294 | 108 | 166 | 34 | 26 | 8X7 | 500 |
| SBWG-03 | B | F-16 (F-20) | 160 | 205 | 8-M16-24 | 250 | 3 | 112 | 287 | 118 | 61 | 87 | 324 | 118 | 176 | 34 | 26 | 8X7 | 560 |
| SBWG-35 | | F-25 | 200 | 254 | 8-M16-24 | 300 | | 127 | 327 | 135 | 72 | 100 | 342 | 136 | 194 | | | | |
| SBWG-04 | | F-25 | 200 | 254 | 8-M16-24 | 300 | | 153 | 385.5 | 147 | 73 | 120 | 370 | 153 | 207 | 34 | 32 | 10X8 | 630 |
| * SBWG-05 | | F-30 | 230 | 298 | 8-M20-30 | 350 | | 180 | 437.5 | 155 | 78 | 141 | 400 | 163 | 217 | | | | 710 |
| SBWG-55 | | | | | | 350 | | 202 | 484.5 | 162 | 80 | 144 | 420 | 183 | 237 | | | | |
| SBWG-06 | | F-35 | 260 | 356 | 8-M30-45 | 415 | | 230 | 558.5 | 200 | 109 | 173 | 489 | 217 | 286 | 44 | 38 | 12X8 | 800 |
| SBWG-07 | | F-40 | 300 | 406 | 8-M36-55 | 475 | | 280.5 | 660.5 | 227 | 116 | 209 | 538 | 252 | 320 | | | | 900 |
| SBWG-75 | C | F-48 | 370 | 483 | 12-M36-55 | 560 | 5 | 326 | 776 | 246 | 120 | 220 | 617 | 279 | 381 | 58 | 50 | 16X10 | 1000 |
| SBWG-08 | | | | | | 560 | | 379 | 884 | 254 | 125 | 245 | 652 | 314 | 416 | | | | |
| SBWG-09 | D | F-60 | 470 | 603 | 20-M36-55 | 700 | 5 | 448.5 | 1023.5 | 284 | 138 | 270 | 692 | 354 | 456 | 58 | 50 | 16X10 | 1000 |
| SBWG-10 | | | | | | 800 | | 513 | 1191 | 352 | 164 | 330 | 814 | 426 | 614 | | | | |
| SBWG-11 | | | | | | 900 | | 616.5 | 1399.5 | 394 | 181 | 370 | 857 | 468.5 | 657 | | | | |
| * SBWG-12 | | F-80 | 670 | 813 | 20-M42-63 | 1000 | | 711 | 1621 | 482 | 265 | 415 | 980 | 554 | 702 | | | | |
| * SBWG-13 | | | | | | 1000 | | 809 | 1814 | 546 | 301 | 515 | 988 | 609 | 752 | | | | |

Size and component specification in this catalogue are subject to change without prior notice for quality improvement.
* Mark has been changed and updated.

## Feature >>>

- All mounting bases conform to ISO 5210/1 standards.
- All castings are ductile iron, Class 65-45-12 excellent strength and impact resistance.
- Worm gear material is available in two option.
  - Ductile iron,Class 80-55-06
  - Aluminum bronze, B148-C95800
- Worm is 1045 heat treated Carbon steel.
- Removable splined bushing to permit accurate positioning between gear drive and valve stem.
- Options include hand wheels, chain and etc.

### Bushing Type

Splines permit accurate alignment of valve stem key.

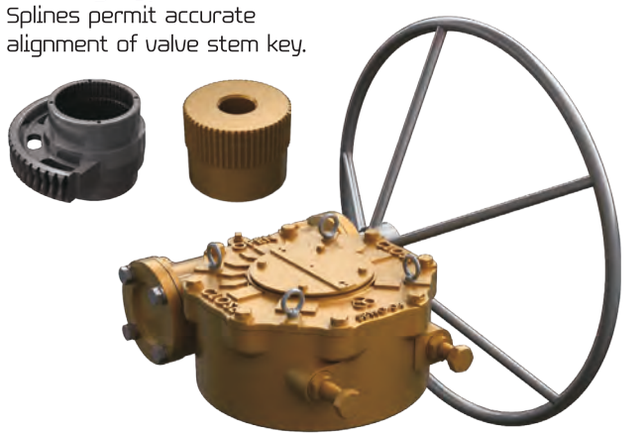

### M·O·V OPTION

Worm Gear can be provided with Motor actuator input flanges to accept standard ISO Mounting Base.

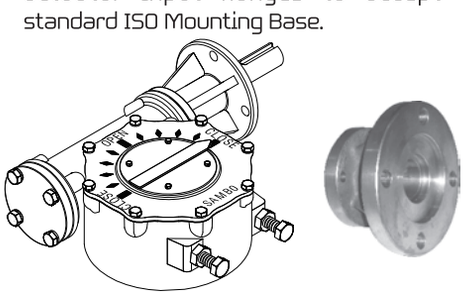

### LOCKING DEVICE OPTION

Input can be equipped with a Handwheel locking device for Manually operated units.

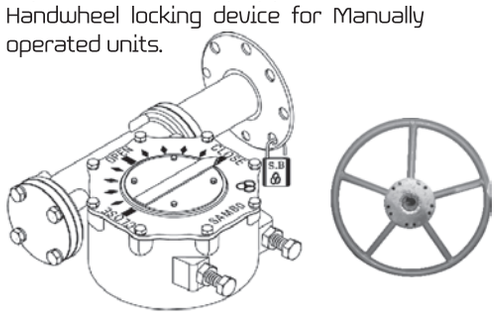

## Selection Chart for Manual Operation >>>

| SIZE / MODEL | GEAR RATIO | MAX. STEM ACCEPTANCE | BASE MOUNTING OPTION & STANDARD | MAX. TORQUE CAPACITY | | WEIGHT |
|---|---|---|---|---|---|---|
| | | | | N–m | Ft . lbf | Kg |
| * SBWG–BF | 32 : 1 | 20 (6X6) | F–05, F–07 | 360 | 266 | 4 |
| SBWG–0 | 36 : 1 | 28 (8X7) | F–07 , F–10 | 780 | 575 | 6 |
| SBWG–00 | 40 : 1 | 36 (10X8) | F–10 , F–12 | 1200 | 885 | 10 |
| SBWG–01 | 44 : 1 | 46 (14X9) | F–10 , F–12 , F–14 | 2000 | 1475 | 13 |
| SBWG–02 | 48 : 1 | 60 (18X11) | F–12 , F–14 , F–16 | 2800 | 2065 | 21 |
| SBWG–03 | 52 : 1 | 75 (20X12) | F–14 , F–16 , (F–20) | 4300 | 3172 | 29 |
| SBWG–35 | 52 : 1 | 80 (22X14) | F–16 , (F–20) , F–25 | 6100 | 4499 | 43 |
| SBWG–04 | 56 : 1 | 95 (25X14) | F–16 , (F–20) , F–25 | 10400 | 7671 | 56 |
| * SBWG–05 | 60 : 1 | 115 (32X18) | (F–20), F–25 , F–30 | 15900 | 11727 | 78 |
| SBWG–55 | 62 : 1 | 125 (32X18) | F–25 , F–30 | 23500 | 17333 | 97 |
| SBWG–06 | 64 : 1 | 140 (36X20) | F–25 , F–30 , F–35 | 32800 | 24192 | 147 |
| SBWG–07 | 68 : 1 | 180 (45X25) | F–30 , F–35 , F–40 | 51100 | 37689 | 243 |
| SBWG–75 | 66 : 1 | 210 (50X28) | F–35 , F–40 , F–48 | 81500 | 60111 | 350 |
| SBWG–08 | 66 : 1 | 250 (56X32) | F–40 , F–48 | 121000 | 89245 | 473 |
| SBWG–09 | 66 : 1 | 280 (63X32) | F–48 , F–60 | 192500 | 141981 | 830 |
| SBWG–10 | 64 : 1 | 320 (70X36) | F–60 | 275000 | 202830 | 1330 |
| SBWG–11 | 68 : 1 | 360 (80X40) | F–60 | 442000 | 326002 | 2085 |
| * SBWG–12 | 70 : 1 | 400 (90X45) | F–60 , (F–80) | 610000 | 449913 | 2900 |
| * SBWG–13 | 72 : 1 | 420 (100X50) | F–60 , (F–80) | 970000 | 715435 | 3800 |

Size and component specification in this catalogue are subject to change without prior notice for quality improvement.
* Mark has been changed and updated.

# STANDARD TYPE-A

## Horizontal Input with Single Reduction Gear Attachment

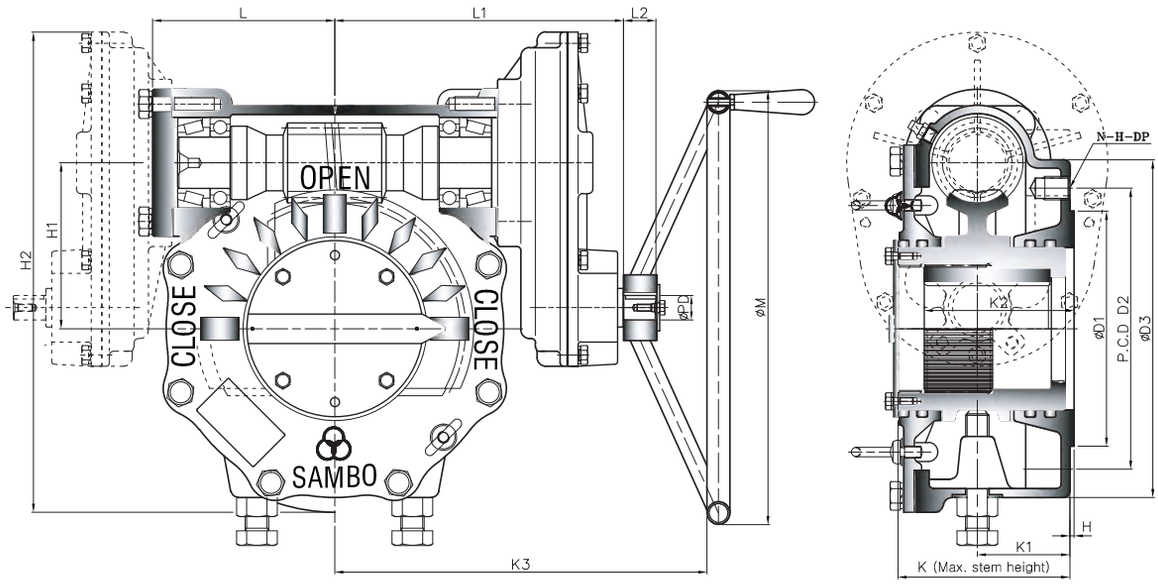


• Pin hole size is same as tap out diameter

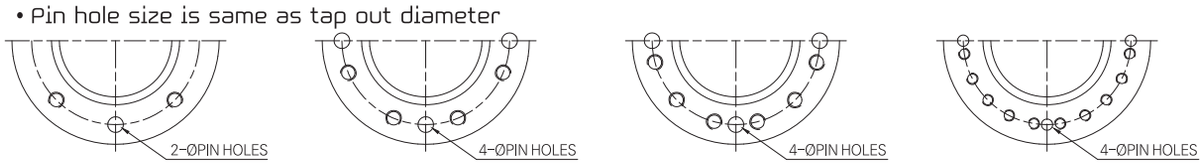


TYPE - A TYPE - B TYPE - C TYPE - D

## Dimension >>>

UNIT : mm

| MODEL \ DIM | BASE PART | | | | | | | EXTERNAL PART | | | | | | | | INPUT SHAFT PART | | | HAND WHEEL |
|---|---|---|---|---|---|---|---|---|---|---|---|---|---|---|---|---|---|---|---|
| | TYPE | FLANGE | ØD1 | P.C.D ØD2 | P.C.D N-H-DP | ØD3 | H | H1 | H2 | K | K1 | K2 | K3 | L | L1 | L2 | ØPD | KEY | |
| SBWG-00-1S | A | F-12 | 85 | 125 | 4-M12-18 | 165 | 2 | 69.5 | 210 | 86.5 | 43 | 53.6 | 259 | 86 | 166 | 29 | 21 | 6X6 | 300 |
| SBWG-01-1S | | F-14 | 100 | 140 | 4-M16-24 | 190 | | 82.5 | 235.5 | 96 | 53 | 65 | 288 | 95 | 175 | | | | 400 |
| SBWG-02-1S | | F-16 | 130 | 165 | 4-M20-30 | 220 | | 97 | 282 | 111.5 | 58 | 75.5 | 329 | 108 | 190.5 | 34 | 26 | 8X7 | 500 |
| SBWG-03-1S | B | F-16 (F-20) | 160 | 205 | 8-M16-24 | 250 | 3 | 112 | 312 | 118 | 61 | 87 | 349 | 118 | 200.5 | 34 | 26 | 8X7 | 560 |
| SBWG-35-1S | | F-25 | 200 | 254 | 8-M16-24 | 300 | | 127 | 352 | 135 | 72 | 100 | 367 | 125 | 218.5 | | | | |
| SBWG-04-1S | | F-25 | 200 | 254 | 8-M16-24 | 300 | | 153 | 417.5 | 147 | 73 | 120 | 413 | 153 | 250 | 34 | 32 | 10X8 | 630 |
| * SBWG-05-1S | | F-30 | 230 | 298 | 8-M20-30 | 350 | | 180 | 469.5 | 155 | 78 | 141 | 443 | 163 | 260 | | | | 710 |
| SBWG-55-1S | | | | | | 350 | | 202 | 516.5 | 162 | 80 | 144 | 463 | 183 | 280 | | | | |
| SBWG-06-1S | | F-35 | 260 | 356 | 8-M30-45 | 415 | | 230 | 621 | 200 | 109 | 173 | 552 | 217 | 349 | 44 | 38 | 12X8 | 800 |
| SBWG-07-1S | | F-40 | 300 | 406 | 8-M36-55 | 475 | | 280.5 | 723 | 227 | 116 | 209 | 607 | 252 | 384 | | | | 900 |
| SBWG-75-1S | C | F-48 | 370 | 483 | 12-M36-55 | 560 | 5 | 326 | 860 | 246 | 120 | 220 | 721 | 279 | 485 | 58 | 50 | 16X10 | 1000 |
| SBWG-08-1S | | | | | | 560 | | 379 | 968 | 254 | 125 | 245 | 756 | 314 | 520 | | | | |
| SBWG-09-1S | D | F-60 | 470 | 603 | 20-M36-55 | 700 | 5 | 448.5 | 1107.5 | 284 | 138 | 270 | 796 | 354 | 560 | 58 | 50 | 16X10 | 1000 |
| SBWG-10-1S | | | | | | 800 | | 513 | 1291 | 352 | 164 | 330 | 927 | 426 | 691 | | | | |
| SBWG-11-1S | | | | | | 900 | | 616.5 | 1499.5 | 394 | 181 | 370 | 969.5 | 468.5 | 733.5 | | | | |
| * SBWG-12-1S | | F-80 | 670 | 813 | 20-M42-63 | 1000 | | 711 | 1751 | 482 | 265 | 415 | 1140 | 554 | 905 | | | | |
| * SBWG-13-1S | | | | | | 1000 | | 809 | 1944 | 546 | 301 | 515 | 1190 | 609 | 955 | | | | |

Size and component specification in this catalogue are subject to change without prior notice for quality improvement.
* Mark has been changed and updated.

## Feature >>>

- All mounting bases conform to ISO 5210/1 standards.
- All castings are ductile iron, Class 65-45-12 excellent strength and impact resistance.
- Worm gear material is available in two option.
  - Ductile iron,Class 80-55-06
  - Aluminum bronze, B148-C95800
- Worm is 1045 heat treated Carbon steel.
- Removable splined bushing to permit accurate positioning between gear drive and valve stem.
- Options include hand wheels, chain and etc.

### Bushing Type

Splines permit accurate alignment of valve stem key.

### M·O·V OPTION

Worm Gear can be provided with Motor actuator input flanges to accept standard ISO Mounting Base.

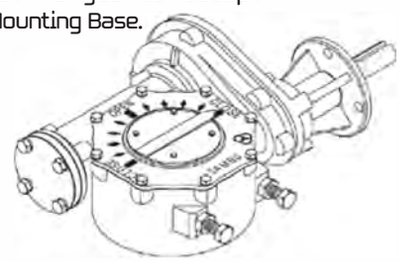

### LOCKING DEVICE OPTION

Input can be equipped with a Handwheel locking device for Manually operated units.

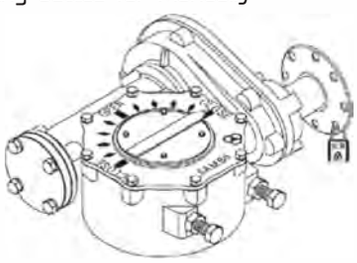

## Selection Chart for Manual Operation >>>

| SIZE / MODEL | GEAR RATIO | MAX. STEM ACCEPTANCE | BASE MOUNTING OPTION & STANDARD | MAX. TORQUE CAPACITY | | WEIGHT |
|---|---|---|---|---|---|---|
| | | | | N-m | Ft . lbf | Kg |
| SBWG-00-1S | 80 : 1 | 36 (10X8) | F-10 , F-12 | 1200 | 885 | 12 |
| SBWG-01-1S | 88 : 1 | 46 (14X9) | F-10 , F-12 , F-14 | 2000 | 1475 | 15 |
| SBWG-02-1S | 121,6 : 1 | 60 (18X11) | F-12 , F-14 , F-16 | 2800 | 2065 | 25 |
| SBWG-03-1S | 131,7 : 1 | 75 (20X12) | F-14 , F-16 , (F-20) | 4300 | 3172 | 33 |
| SBWG-35-1S | 131,7 : 1 | 80 (22X14) | F-16 , (F-20) , F-25 | 6100 | 4499 | 50 |
| SBWG-04-1S | 168 : 1 | 95 (25X14) | F-16 , (F-20) , F-25 | 10400 | 7671 | 66 |
| * SBWG-05-1S | 180 : 1 | 115 (32X18) | (F-20), F-25 , F-30 | 15900 | 11727 | 88 |
| SBWG-55-1S | 186 : 1 | 125 (32X18) | F-25 , F-30 | 23500 | 17333 | 107 |
| SBWG-06-1S | 256 : 1 | 140 (36X20) | F-25 , F-30 , F-35 | 32800 | 24192 | 175 |
| SBWG-07-1S | 272 : 1 | 180 (45X25) | F-30 , F-35 , F-40 | 51100 | 37689 | 271 |
| SBWG-75-1S | 330 : 1 | 210 (50X28) | F-35 , F-40 , F-48 | 81500 | 60111 | 422 |
| SBWG-08-1S | 330 : 1 | 250 (56X32) | F-40 , F-48 | 121000 | 89245 | 545 |
| SBWG-09-1S | 330 : 1 | 280 (63X32) | F-48 , F-60 | 192500 | 141981 | 902 |
| SBWG-10-1S | 320 : 1 | 320 (70X36) | F-60 | 275000 | 202830 | 1426 |
| SBWG-11-1S | 340 : 1 | 360 (80X40) | F-60 | 442000 | 326002 | 2182 |
| * SBWG-12-1S | 350 : 1 | 400 (90X45) | F-60 , (F-80) | 610000 | 449913 | 3081 |
| * SBWG-13-1S | 360 : 1 | 420 (100X50) | F-60 , (F-80) | 970000 | 715435 | 3980 |

Size and component specification in this catalogue are subject to change without prior notice for quality improvement.
* Mark has been changed and updated.

# STANDARD TYPE-A Twin Shaft

## Horizontal Input with Single Reduction Gear Attachment

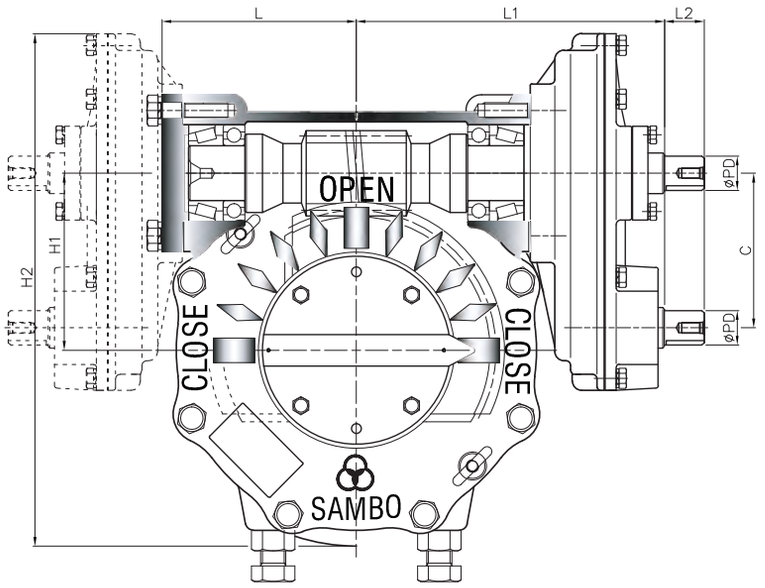


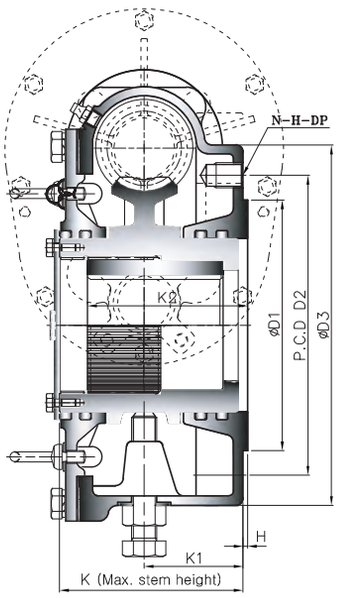


• Pin hole size is same as tap out diameter

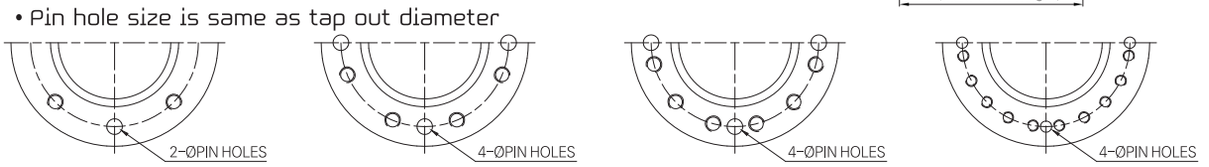


TYPE - A TYPE - B TYPE - C TYPE - D

## Dimension >>>

UNIT : mm

| MODEL \ DIM | BASE PART | | | | | | | EXTERNAL PART | | | | | | | | INPUT SHAFT PART | | | HAND WHEEL |
|---|---|---|---|---|---|---|---|---|---|---|---|---|---|---|---|---|---|---|---|
| | TYPE | FLANGE | ØD1 | P.C.D ØD2 | P.C.D N-H-DP | ØD3 | H | H1 | H2 | K | K1 | K2 | C | L | L1 | L2 | ØPD | KEY | |
| SBWG-00-1ST | A | F-12 | 85 | 125 | 4-M12-18 | 165 | 2 | 69.5 | 210 | 86.5 | 43 | 53.6 | 55.9 | 86 | 183 | 29 | 21 | 6X6 | 300 |
| SBWG-01-1ST | | F-14 | 100 | 140 | 4-M16-24 | 190 | | 82.5 | 235.5 | 96 | 53 | 65 | | 95 | 192 | | | | 400 |
| SBWG-02-1ST | | F-16 | 130 | 165 | 4-M20-30 | 220 | | 97 | 282 | 111.5 | 58 | 75.5 | 68.6 | 108 | 214.5 | 34 | 26 | 8X7 | 500 |
| SBWG-03-1ST | B | F-16 (F-20) | 160 | 205 | 8-M16-24 | 250 | 3 | 112 | 312 | 118 | 61 | 87 | 68.6 | 118 | 224.5 | 34 | 26 | 8X7 | 560 |
| SBWG-35-1ST | | F-25 | 200 | 254 | 8-M16-24 | 300 | | 127 | 352 | 135 | 72 | 100 | | 125 | 218.5 | | | | |
| SBWG-04-1ST | | F-25 | 200 | 254 | 8-M16-24 | 300 | | 153 | 417.5 | 147 | 73 | 120 | 121.2 | 153 | 286 | 34 | 32 | 10X8 | 630 |
| * SBWG-05-1ST | | F-30 | 230 | 298 | 8-M20-30 | 350 | | 180 | 469.5 | 155 | 78 | 141 | | 163 | 296 | | | | 710 |
| SBWG-55-1ST | | | | | | 350 | | 202 | 516.5 | 162 | 80 | 144 | | 183 | 316 | | | | |
| SBWG-06-1ST | | F-35 | 260 | 356 | 8-M30-45 | 415 | | 230 | 621 | 200 | 109 | 173 | 169 | 217 | 376 | 44 | 38 | 12X8 | 800 |
| SBWG-07-1ST | | F-40 | 300 | 406 | 8-M36-55 | 475 | | 280.5 | 723 | 227 | 116 | 209 | | 252 | 411 | | | | 900 |
| SBWG-75-1ST | C | F-48 | 370 | 483 | 12-M36-55 | 560 | 5 | 326 | 860 | 246 | 120 | 220 | 230 | 279 | 531 | 58 | 50 | 16X10 | 1000 |
| SBWG-08-1ST | | | | | | 560 | | 379 | 968 | 254 | 125 | 245 | | 314 | 566 | | | | |
| SBWG-09-1ST | D | F-60 | 470 | 603 | 20-M36-55 | 700 | 5 | 448.5 | 1107.5 | 284 | 138 | 270 | 230 | 354 | 606 | 58 | 50 | 16X10 | 1000 |
| SBWG-10-1ST | | | | | | 800 | | 513 | 1291 | 352 | 164 | 330 | 284.3 | 426 | 746 | | | | |
| SBWG-11-1ST | | | | | | 900 | | 616.5 | 1499.5 | 394 | 181 | 370 | | 468.5 | 788.5 | | | | |
| * SBWG-12-1ST | | F-80 | 670 | 813 | 20-M42-63 | 1000 | | 711 | 1751 | 482 | 265 | 415 | 334 | 554 | 969 | | | | |
| * SBWG-13-1ST | | | | | | 1000 | | 809 | 1944 | 546 | 301 | 515 | | 609 | 1009 | | | | |

Size and component specification in this catalogue are subject to change without prior notice for quality improvement.
* Mark has been changed and updated.

## Feature >>>

- All mounting bases conform to ISO 5210/1 standards.
- All castings are ductile iron, Class 65-45-12 excellent strength and impact resistance.
- Worm gear material is available in two option.
  - Ductile iron,Class 80-55-06
  - Aluminum bronze, B148-C95800
- Worm is 1045 heat treated Carbon steel.
- Removable splined bushing to permit accurate positioning between gear drive and valve stem.
- Options include hand wheels, chain and etc.

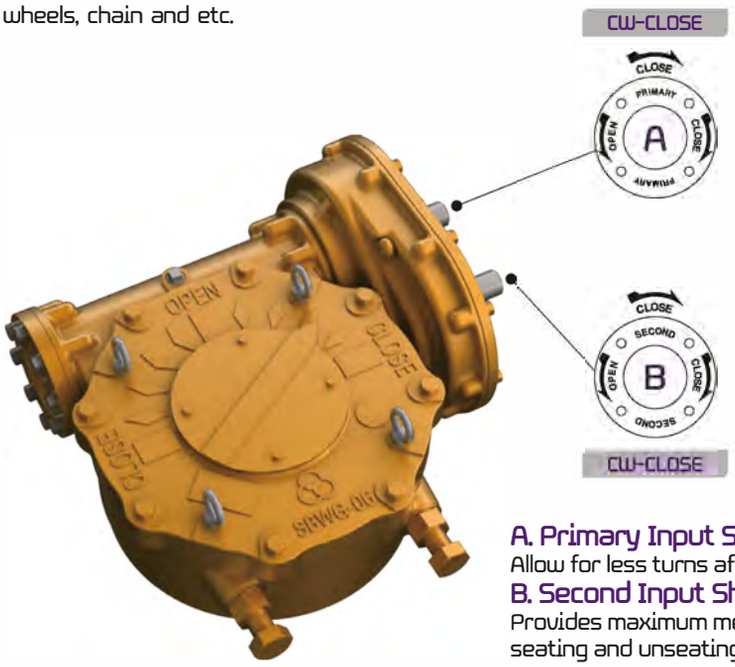


### Bushing Type

Splines permit accurate alignment of valve stem key.

### A. Primary Input Shaft (High Speed Input Shaft)

Allow for less turns after valve has been unseating.

### B. Second Input Shaft (Low Speed Input Shaft)

Provides maximum mechanical advantage for seating and unseating of valves.

## Selection Chart for Manual Operation >>>

| SIZE / MODEL | GEAR RATIO | | MAX. STEM ACCEPTANCE | BASE MOUNTING OPTION & STANDARD | MAX. TORQUE CAPACITY | | WEIGHT |
|---|---|---|---|---|---|---|---|
| | PRIMARY | SECOND | | | N–m | Ft . lbf | Kg |
| SBWG–00–1ST | 40 : 1 | 80 : 1 | 36 (10X8) | F–10 , F–12 | 1200 | 885 | 12 |
| SBWG–01–1ST | 44 : 1 | 88 : 1 | 46 (14X9) | F–10 , F–12 , F–14 | 2000 | 1475 | 15 |
| SBWG–02–1ST | 48 : 1 | 121.6 : 1 | 60 (18X11) | F–12 , F–14 , F–16 | 2800 | 2065 | 25 |
| SBWG–03–1ST | 52 : 1 | 131.7 : 1 | 75 (20X12) | F–14 , F–16 , (F–20) | 4300 | 3172 | 33 |
| SBWG–35–1ST | 52 : 1 | 131.7 : 1 | 80 (22X14) | F–16 , (F–20) , F–25 | 6100 | 4499 | 50 |
| SBWG–04–1ST | 56 : 1 | 168 : 1 | 95 (25X14) | F–16 , (F–20) , F–25 | 10400 | 7671 | 66 |
| * SBWG–05–1ST | 60 : 1 | 180 : 1 | 115 (32X18) | (F–20), F–25 , F–30 | 15900 | 11727 | 88 |
| SBWG–55–1ST | 62 : 1 | 186 : 1 | 125 (32X18) | F–25 , F–30 | 23500 | 17333 | 107 |
| SBWG–06–1ST | 64 : 1 | 256 : 1 | 140 (36X20) | F–25 , F–30 , F–35 | 32800 | 24192 | 175 |
| SBWG–07–1ST | 68 : 1 | 272 : 1 | 180 (45X25) | F–30 , F–35 , F–40 | 51100 | 37689 | 271 |
| SBWG–75–1ST | 66 : 1 | 330 : 1 | 210 (50X28) | F–35 , F–40 , F–48 | 81500 | 60111 | 422 |
| SBWG–08–1ST | 66 : 1 | 330 : 1 | 250 (56X32) | F–40 , F–48 | 121000 | 89245 | 545 |
| SBWG–09–1ST | 66 : 1 | 330 : 1 | 280 (63X32) | F–48 , F–60 | 192500 | 141981 | 902 |
| SBWG–10–1ST | 64 : 1 | 320 : 1 | 320 (70X36) | F–60 | 275000 | 202830 | 1426 |
| SBWG–11–1ST | 68 : 1 | 340 : 1 | 360 (80X40) | F–60 | 442000 | 326002 | 2182 |
| * SBWG–12–1ST | 70 : 1 | 350 : 1 | 400 (90X45) | F–60 , (F–80) | 610000 | 449913 | 3081 |
| * SBWG–13–1ST | 72 : 1 | 360 : 1 | 420 (100X50) | F–60 , (F–80) | 970000 | 715435 | 3980 |

Size and component specification in this catalogue are subject to change without prior notice for quality improvement.
* Mark has been changed and updated.

# STANDARD TYPE-A

## Horizontal Input with Double Reduction Gear Attachment

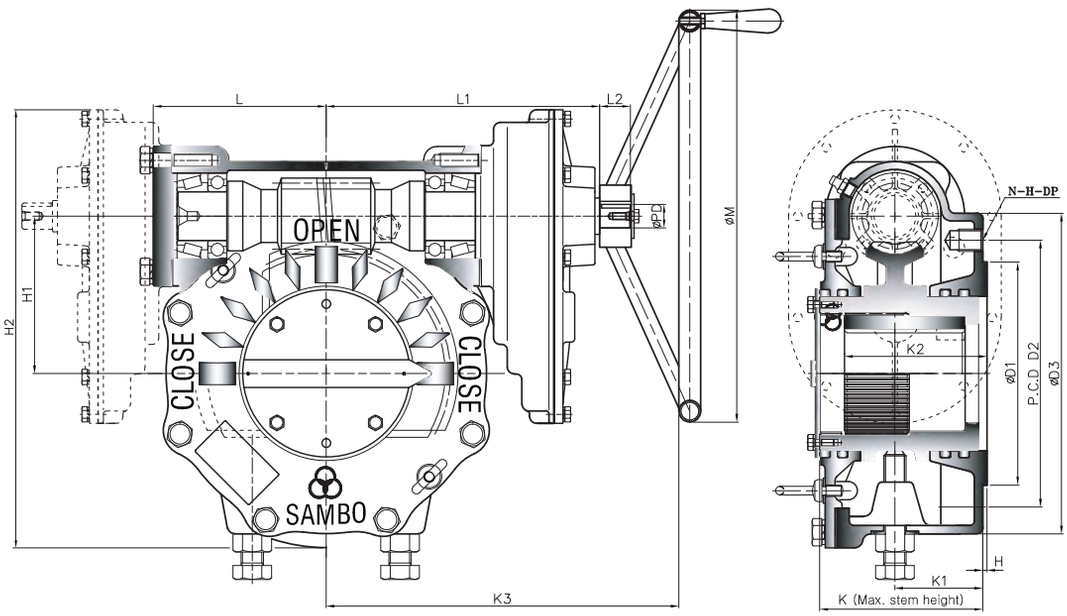


• Pin hole size is same as tap out diameter

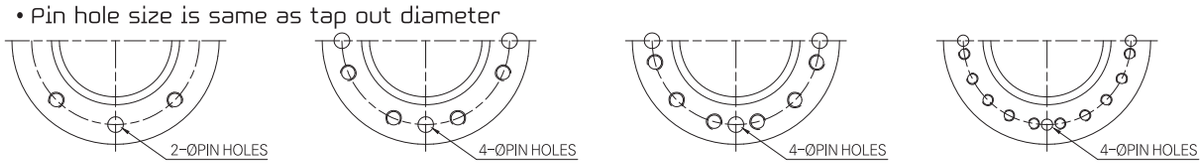


TYPE - A TYPE - B TYPE - C TYPE - D

## Dimension >>>

UNIT : mm

| MODEL \ DIM | BASE PART | | | | | | | EXTERNAL PART | | | | | | | | INPUT SHAFT PART | | | HAND WHEEL |
|---|---|---|---|---|---|---|---|---|---|---|---|---|---|---|---|---|---|---|---|
| | TYPE | FLANGE | ØD1 | P.C.D ØD2 | P.C.D N-H-DP | ØD3 | H | H1 | H2 | K | K1 | K2 | K3 | L | L1 | L2 | ØPD | KEY | |
| SBWG-00-1SD | A | F-12 | 85 | 125 | 4-M12-18 | 165 | 2 | 69.5 | 210 | 86.5 | 43 | 53.6 | 276 | 86 | 183 | 29 | 21 | 6X6 | 300 |
| SBWG-01-1SD | | F-14 | 100 | 140 | 4-M16-24 | 190 | | 82.5 | 235.5 | 96 | 53 | 65 | 305 | 95 | 192 | | | | 400 |
| SBWG-02-1SD | | F-16 | 130 | 165 | 4-M20-30 | 220 | | 97 | 282 | 111.5 | 58 | 75.5 | 343 | 108 | 214.5 | 34 | 26 | 8X7 | 500 |
| SBWG-03-1SD | B | F-16 (F-20) | 160 | 205 | 8-M16-24 | 250 | 3 | 112 | 312 | 118 | 61 | 87 | 373 | 118 | 224.5 | 34 | 26 | 8X7 | 560 |
| SBWG-35-1SD | | F-25 | 200 | 254 | 8-M16-24 | 300 | | 127 | 352 | 135 | 72 | 100 | 385 | 125 | 236.5 | | | | |
| SBWG-04-1SD | | F-25 | 200 | 254 | 8-M16-24 | 300 | | 153 | 417.5 | 147 | 73 | 120 | 449 | 153 | 286 | 34 | 32 | 10X8 | 630 |
| * SBWG-05-1SD | | F-30 | 230 | 298 | 8-M20-30 | 350 | | 180 | 469.5 | 155 | 78 | 141 | 479 | 163 | 296 | | | | 710 |
| SBWG-55-1SD | | | | | | 350 | | 202 | 516.5 | 162 | 80 | 144 | 499 | 183 | 316 | | | | |
| SBWG-06-1SD | | F-35 | 260 | 356 | 8-M30-45 | 415 | | 230 | 621 | 200 | 109 | 173 | 579 | 217 | 376 | 44 | 38 | 12X8 | 800 |
| SBWG-07-1SD | | F-40 | 300 | 406 | 8-M36-55 | 475 | | 280.5 | 723 | 227 | 116 | 209 | 634 | 252 | 411 | | | | 900 |
| SBWG-75-1SD | C | F-48 | 370 | 483 | 12-M36-55 | 560 | 5 | 326 | 860 | 246 | 120 | 220 | 767 | 279 | 531 | 58 | 50 | 16X10 | 1000 |
| SBWG-08-1SD | | | | | | 560 | | 379 | 968 | 254 | 125 | 245 | 802 | 314 | 566 | | | | |
| SBWG-09-1SD | D | F-60 | 470 | 603 | 20-M36-55 | 700 | 5 | 448.5 | 1107.5 | 284 | 138 | 270 | 842 | 354 | 606 | 58 | 50 | 16X10 | 1000 |
| SBWG-10-1SD | | | | | | 800 | | 513 | 1291 | 352 | 164 | 330 | 982 | 426 | 746 | | | | |
| SBWG-11-1SD | | | | | | 900 | | 616.5 | 1499.5 | 394 | 181 | 370 | 1039.5 | 468.5 | 788.5 | | | | |
| * SBWG-12-1SD | | F-80 | 670 | 813 | 20-M42-63 | 1000 | | 711 | 1751 | 482 | 265 | 415 | 1205 | 554 | 969 | | | | |
| * SBWG-13-1SD | | | | | | 1000 | | 809 | 1944 | 546 | 301 | 515 | 1245 | 609 | 1009 | | | | |

Size and component specification in this catalogue are subject to change without prior notice for quality improvement.
* Mark has been changed and updated.

## Feature >>>

- All mounting bases conform to ISO 5210/1 standards.
- All castings are ductile iron, Class 65-45-12 excellent strength and impact resistance.
- Worm gear material is available in two option.
  - Ductile iron,Class 80-55-06
  - Aluminum bronze, B148-C95800
- Worm is 1045 heat treated Carbon steel.
- Removable splined bushing to permit accurate positioning between gear drive and valve stem.
- Options include hand wheels, chain and etc.

### Bushing Type

Splines permit accurate alignment of valve stem key.

### M·O·V OPTION

Worm Gear can be provided with Motor actuator input flanges to accept standard ISO Mounting Base.

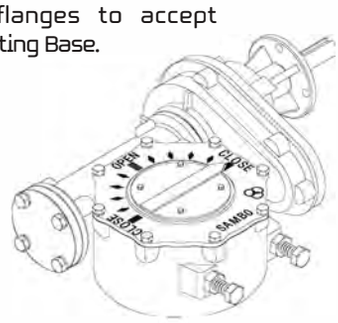


### LOCKING DEVICE OPTION

Input can be equipped with a Handwheel locking device for Manually operated units.

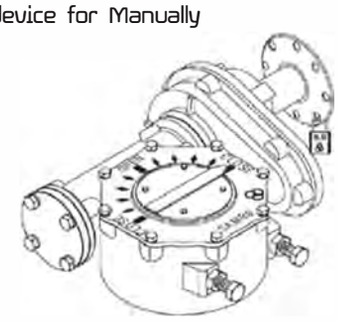

## Selection Chart for Manual Operation >>>

| SIZE / MODEL | MAX.GEAR RATIO (Changeable) | MAX. STEM ACCEPTANCE | BASE MOUNTING OPTION & STANDARD | MAX. TORQUE CAPACITY | | WEIGHT |
|---|---|---|---|---|---|---|
| | | | | N-m | Ft . lbf | Kg |
| SBWG-00-1SD | 160 : 1 | 36 (10X8) | F-10 , F-12 | 1200 | 885 | 14 |
| SBWG-01-1SD | 176 : 1 | 46 (14X9) | F-10 , F-12 , F-14 | 2000 | 1475 | 17 |
| SBWG-02-1SD | 308 : 1 | 60 (18X11) | F-12 , F-14 , F-16 | 2800 | 2065 | 27 |
| SBWG-03-1SD | 333,7 : 1 | 75 (20X12) | F-14 , F-16 , (F-20) | 4300 | 3172 | 35 |
| SBWG-35-1SD | 333,7 : 1 | 80 (22X14) | F-16 , (F-20) , F-25 | 6100 | 4499 | 52 |
| SBWG-04-1SD | 504 : 1 | 95 (25X14) | F-16 , (F-20) , F-25 | 10400 | 7671 | 71 |
| * SBWG-05-1SD | 540 : 1 | 115 (32X18) | (F-20), F-25 , F-30 | 15900 | 11727 | 93 |
| SBWG-55-1SD | 558 : 1 | 125 (32X18) | F-25 , F-30 | 23500 | 17333 | 112 |
| SBWG-06-1SD | 1024 : 1 | 140 (36X20) | F-25 , F-30 , F-35 | 32800 | 24192 | 188 |
| SBWG-07-1SD | 1088 : 1 | 180 (45X25) | F-30 , F-35 , F-40 | 51100 | 37689 | 284 |
| SBWG-75-1SD | 1650 : 1 | 210 (50X28) | F-35 , F-40 , F-48 | 81500 | 60111 | 450 |
| SBWG-08-1SD | 1650 : 1 | 250 (56X32) | F-40 , F-48 | 121000 | 89245 | 573 |
| SBWG-09-1SD | 1650 : 1 | 280 (63X32) | F-48 , F-60 | 192500 | 141981 | 930 |
| SBWG-10-1SD | 1600 : 1 | 320 (70X36) | F-60 | 275000 | 202830 | 1464 |
| SBWG-11-1SD | 1700 : 1 | 360 (80X40) | F-60 | 442000 | 326002 | 2220 |
| * SBWG-12-1SD | 1750 : 1 | 400 (90X45) | F-60 , (F-80) | 610000 | 449913 | 3081 |
| * SBWG-13-1SD | 1800 : 1 | 420 (100X50) | F-60 , (F-80) | 970000 | 715435 | 3980 |

Size and component specification in this catalogue are subject to change without prior notice for quality improvement.
* Mark has been changed and updated.

# STANDARD TYPE-A Twin Shaft

## Horizontal Input with Double Reduction Gear Attachment

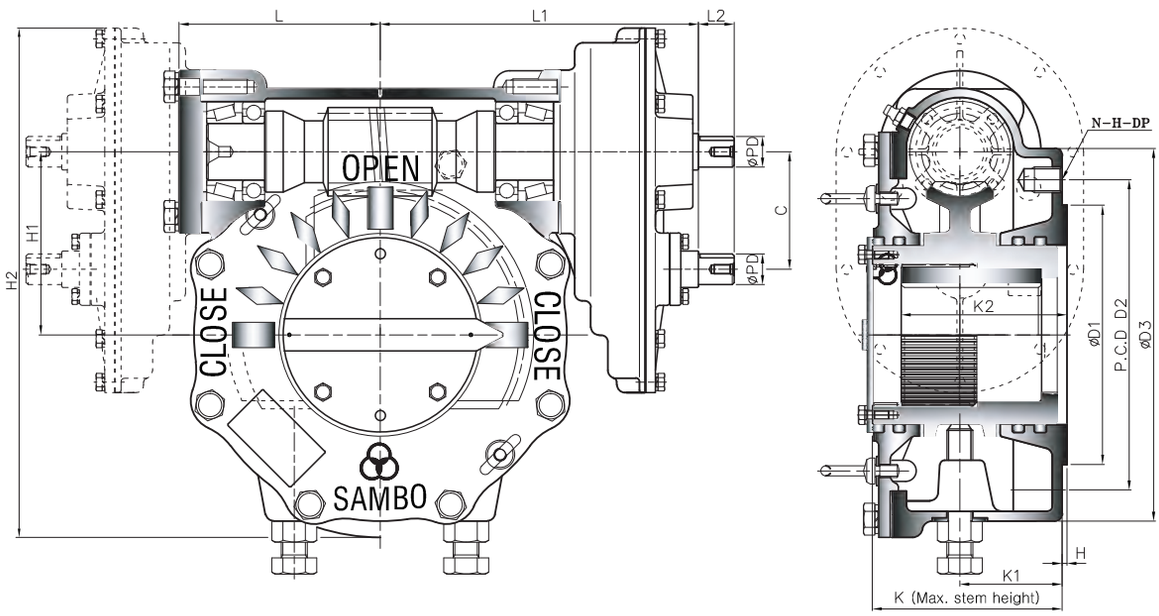


• Pin hole size is same as tap out diameter

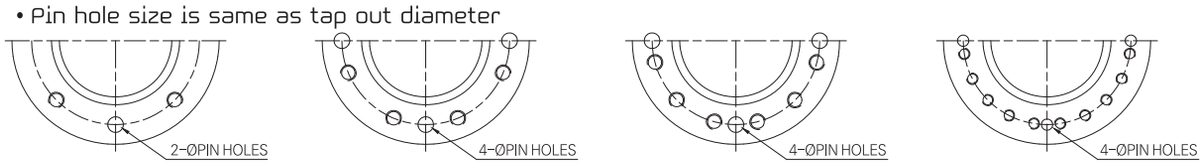


TYPE - A TYPE - B TYPE - C TYPE - D

## Dimension >>>

UNIT : mm

| MODEL \ DIM | BASE PART | | | | | | | EXTERNAL PART | | | | | | | | INPUT SHAFT PART | | | HAND WHEEL |
|---|---|---|---|---|---|---|---|---|---|---|---|---|---|---|---|---|---|---|---|
| | TYPE | FLANGE | ØD1 | P.C.D ØD2 | P.C.D N-H-DP | ØD3 | H | H1 | H2 | K | K1 | K2 | C | L | L1 | L2 | ØPD | KEY | |
| SBWG-00-1SDT | A | F-12 | 85 | 125 | 4-M12-18 | 165 | 2 | 69.5 | 210 | 86.5 | 43 | 53.6 | 55.9 | 86 | 183 | 29 | 21 | 6X6 | 300 |
| SBWG-01-1SDT | | F-14 | 100 | 140 | 4-M16-24 | 190 | | 82.5 | 235.5 | 96 | 53 | 65 | | 95 | 192 | | | | 400 |
| SBWG-02-1SDT | | F-16 | 130 | 165 | 4-M20-30 | 220 | | 97 | 282 | 111.5 | 58 | 75.5 | 68.6 | 108 | 214.5 | 34 | 26 | 8X7 | 500 |
| SBWG-03-1SDT | B | F-16 (F-20) | 160 | 205 | 8-M16-24 | 250 | 3 | 112 | 312 | 118 | 61 | 87 | 68.6 | 118 | 224.5 | 34 | 26 | 8X7 | 560 |
| SBWG-35-1SDT | | F-25 | 200 | 254 | 8-M16-24 | 300 | | 127 | 352 | 135 | 72 | 100 | | 125 | 236.5 | | | | |
| SBWG-04-1SDT | | F-25 | 200 | 254 | 8-M16-24 | 300 | | 153 | 417.5 | 147 | 73 | 120 | 93.2 | 153 | 286 | 34 | 32 | 10X8 | 630 |
| *SBWG-05-1SDT | | F-30 | 230 | 298 | 8-M20-30 | 350 | | 180 | 469.5 | 155 | 78 | 141 | | 163 | 296 | | | | 710 |
| SBWG-55-1SDT | | | | | | 350 | | 202 | 516.5 | 162 | 80 | 144 | | 183 | 316 | | | | |
| SBWG-06-1SDT | | F-35 | 260 | 356 | 8-M30-45 | 415 | | 230 | 621 | 200 | 109 | 173 | 145 | 217 | 376 | 44 | 38 | 12X8 | 800 |
| SBWG-07-1SDT | | F-40 | 300 | 406 | 8-M36-55 | 475 | | 280.5 | 723 | 227 | 116 | 209 | | 252 | 411 | | | | 900 |
| SBWG-75-1SDT | C | F-48 | 370 | 483 | 12-M36-55 | 560 | 5 | 326 | 860 | 246 | 120 | 220 | 186.4 | 279 | 531 | 58 | 50 | 16X10 | 1000 |
| SBWG-08-1SDT | | | | | | 560 | | 379 | 968 | 254 | 125 | 245 | | 314 | 566 | | | | |
| SBWG-09-1SDT | D | F-60 | 470 | 603 | 20-M36-55 | 700 | 5 | 448.5 | 1107.5 | 284 | 138 | 270 | 186.4 | 354 | 606 | 58 | 50 | 16X10 | 1000 |
| SBWG-10-1SDT | | | | | | 800 | | 513 | 1291 | 352 | 164 | 330 | 237.6 | 426 | 746 | | | | |
| SBWG-11-1SDT | | | | | | 900 | | 616.5 | 1499.5 | 394 | 181 | 370 | | 468.5 | 788.5 | | | | |
| *SBWG-12-1SDT | | F-80 | 670 | 813 | 20-M42-63 | 1000 | | 711 | 1751 | 482 | 265 | 415 | 298.5 | 554 | 969 | | | | |
| *SBWG-13-1SDT | | | | | | 1000 | | 809 | 1944 | 546 | 301 | 515 | | 609 | 1009 | | | | |

Size and component specification in this catalogue are subject to change without prior notice for quality improvement.
* Mark has been changed and updated.

## Feature >>>

- All mounting bases conform to ISO 5210/1 standards.
- All castings are ductile iron, Class 65-45-12 excellent strength and impact resistance.
- Worm gear material is available in two option.
  - Ductile iron,Class 80-55-06
  - Aluminum bronze, B148-C95800
- Worm is 1045 heat treated Carbon steel.
- Removable splined bushing to permit accurate positioning between gear drive and valve stem.
- Options include hand wheels, chain and etc.

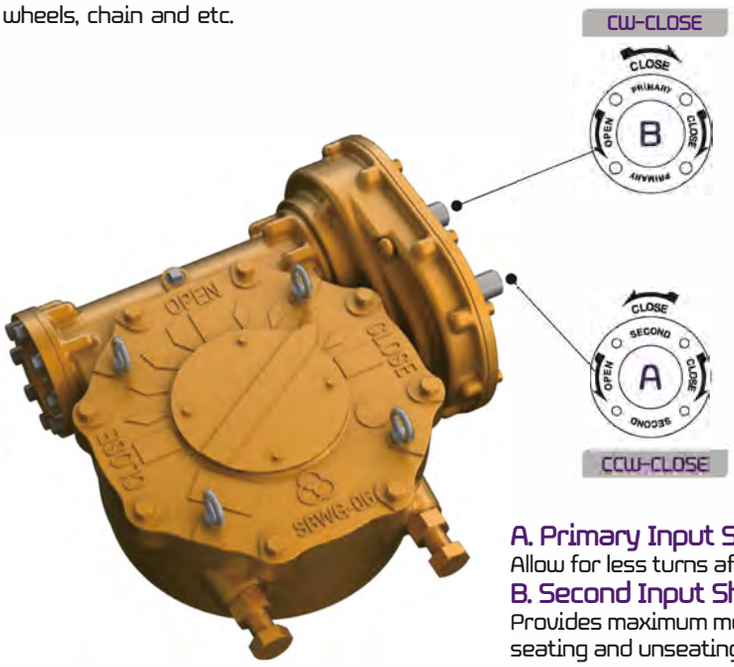


### Bushing Type

Splines permit accurate alignment of valve stem key.

### A. Primary Input Shaft (High Speed Input Shaft)

Allow for less turns after valve has been unseating.

### B. Second Input Shaft (Low Speed Input Shaft)

Provides maximum mechanical advantage for seating and unseating of valves.

## Selection Chart for Manual Operation >>>

| SIZE / MODEL | GEAR RATIO | | MAX. STEM ACCEPTANCE | BASE MOUNTING OPTION & STANDARD | MAX. TORQUE CAPACITY | | WEIGHT |
|---|---|---|---|---|---|---|---|
| | PRIMARY | SECOND | | | N–m | Ft . lbf | Kg |
| SBWG–00–1SDT | 80 : 1 | 160 : 1 | 36 (10X8) | F–10 , F–12 | 1200 | 885 | 14 |
| SBWG–01–1SDT | 88 : 1 | 176 : 1 | 46 (14X9) | F–10 , F–12 , F–14 | 2000 | 1475 | 17 |
| SBWG–02–1SDT | 121.6 : 1 | 308 : 1 | 60 (18X11) | F–12 , F–14 , F–16 | 2800 | 2065 | 27 |
| SBWG–03–1SDT | 131.7 : 1 | 333.7 : 1 | 75 (20X12) | F–14 , F–16 , (F–20) | 4300 | 3172 | 35 |
| SBWG–35–1SDT | 131.7 : 1 | 333.7 : 1 | 80 (22X14) | F–16 , (F–20) , F–25 | 6100 | 4499 | 52 |
| SBWG–04–1SDT | 168 : 1 | 504 : 1 | 95 (25X14) | F–16 , (F–20) , F–25 | 10400 | 7671 | 71 |
| *SBWG–05–1SDT | 180 : 1 | 540 : 1 | 115 (32X18) | (F–20), F–25 , F–30 | 15900 | 11727 | 93 |
| SBWG–55–1SDT | 186 : 1 | 558 : 1 | 125 (32X18) | F–25 , F–30 | 23500 | 17333 | 112 |
| SBWG–06–1SDT | 256 : 1 | 1024 : 1 | 140 (36X20) | F–25 , F–30 , F–35 | 32800 | 24192 | 188 |
| SBWG–07–1SDT | 272 : 1 | 1088 : 1 | 180 (45X25) | F–30 , F–35 , F–40 | 51100 | 37689 | 284 |
| SBWG–75–1SDT | 330 : 1 | 1650 : 1 | 210 (50X28) | F–35 , F–40 , F–48 | 81500 | 60111 | 450 |
| SBWG–08–1SDT | 330 : 1 | 1650 : 1 | 250 (56X32) | F–40 , F–48 | 121000 | 89245 | 573 |
| SBWG–09–1SDT | 330 : 1 | 1650 : 1 | 280 (63X32) | F–48 , F–60 | 192500 | 141981 | 930 |
| SBWG–10–1SDT | 320 : 1 | 1600 : 1 | 320 (70X36) | F–60 | 275000 | 202830 | 1464 |
| SBWG–11–1SDT | 340 : 1 | 1700 : 1 | 360 (80X40) | F–60 | 442000 | 326002 | 2220 |
| *SBWG–12–1SDT | 350 : 1 | 1750 : 1 | 400 (90X45) | F–60 , (F–80) | 610000 | 449913 | 3081 |
| *SBWG–13–1SDT | 360 : 1 | 1800 : 1 | 420 (100X50) | F–60 , (F–80) | 970000 | 715435 | 3980 |

Size and component specification in this catalogue are subject to change without prior notice for quality improvement.
* Mark has been changed and updated.

# STANDARD TYPE-A

## Horizontal Input with Triple Reduction Gear Attachment

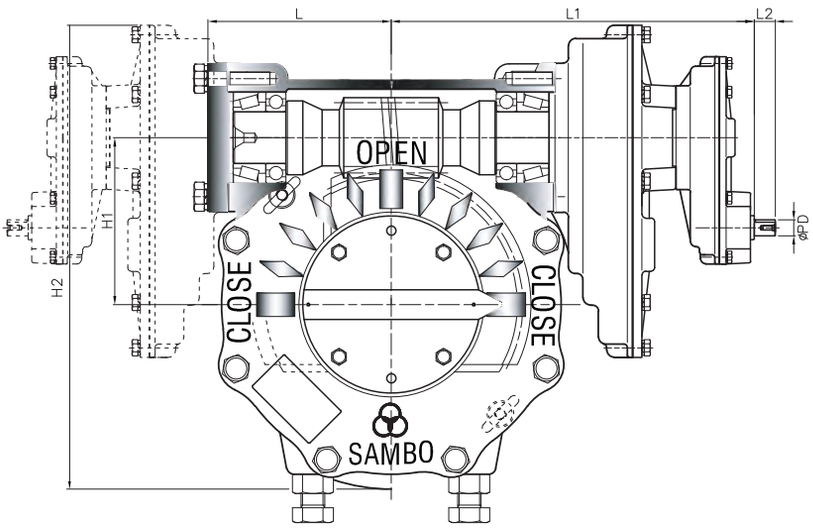


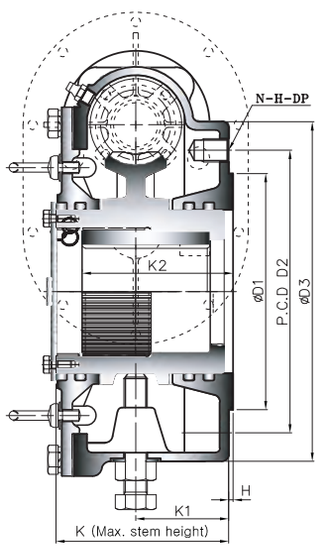


• Pin hole size is same as tap out diameter

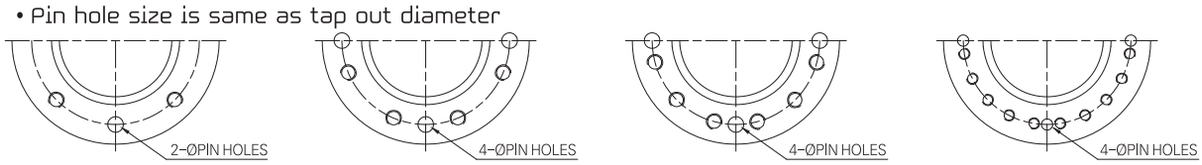


TYPE - A TYPE - B TYPE - C TYPE - D

## Dimension >>>

UNIT : mm

| DIM / MODEL | BASE PART | | | | | | | EXTERNAL PART | | | | | | | INPUT SHAFT PART | | | HAND WHEEL |
|---|---|---|---|---|---|---|---|---|---|---|---|---|---|---|---|---|---|---|
| | TYPE | FLANGE | ØD1 | P.C.D ØD2 | P.C.D N-H-DP | ØD3 | H | H1 | H2 | K | K1 | K2 | L | L1 | L2 | ØPD | KEY | |
| SBWG-00-2SD | A | F-12 | 85 | 125 | 4-M12-18 | 165 | 2 | 69.5 | 210 | 86.5 | 43 | 53.6 | 86 | 261 | 29 | 21 | 6X6 | 300 |
| SBWG-01-2SD | | F-14 | 100 | 140 | 4-M16-24 | 190 | | 82.5 | 235.5 | 96 | 53 | 65 | 95 | 270 | | | | 300 |
| SBWG-02-2SD | | F-16 | 130 | 165 | 4-M20-30 | 220 | | 97 | 282 | 111.5 | 58 | 75.5 | 108 | 295.5 | 29 | 21 | 6X6 | 300 |
| SBWG-03-2SD | B | F-16 (F-20) | 160 | 205 | 8-M16-24 | 250 | 3 | 112 | 312 | 118 | 61 | 87 | 118 | 305.5 | 29 | 21 | 6X6 | 400 |
| SBWG-35-2SD | | F-25 | 200 | 254 | 8-M16-24 | 300 | | 127 | 352 | 135 | 72 | 100 | 125 | 317.5 | | | | |
| SBWG-04-2SD | | F-25 | 200 | 254 | 8-M16-24 | 300 | | 153 | 417.5 | 147 | 73 | 120 | 153 | 364.5 | 34 | 26 | 8X7 | 500 |
| *SBWG-05-2SD | | F-30 | 230 | 298 | 8-M20-30 | 350 | | 180 | 469.5 | 155 | 78 | 141 | 163 | 374.5 | | | | 560 |
| SBWG-55-2SD | | | | | | 350 | | 202 | 516.5 | 162 | 80 | 144 | 183 | 394.5 | | | | |
| SBWG-06-2SD | | F-35 | 260 | 356 | 8-M30-45 | 415 | | 230 | 621 | 200 | 109 | 173 | 217 | 471 | 34 | 32 | 10X8 | 630 |
| SBWG-07-2SD | | F-40 | 300 | 406 | 8-M36-55 | 475 | | 280.5 | 723 | 227 | 116 | 209 | 252 | 506 | | | | 710 |
| SBWG-75-2SD | C | F-48 | 370 | 483 | 12-M36-55 | 560 | 5 | 326 | 860 | 246 | 120 | 220 | 279 | 662 | 44 | 38 | 12X8 | 800 |
| SBWG-08-2SD | | | | | | 560 | | 379 | 968 | 254 | 125 | 245 | 314 | 697 | | | | 900 |
| SBWG-09-2SD | D | F-60 | 470 | 603 | 20-M36-55 | 700 | 5 | 448.5 | 1107.5 | 284 | 138 | 270 | 354 | 737 | 44 | 38 | 12X8 | 900 |
| SBWG-10-2SD | | | | | | 800 | | 513 | 1291 | 352 | 164 | 330 | 426 | 959 | 58 | 50 | 16X10 | 1000 |
| SBWG-11-2SD | | | | | | 900 | | 616.5 | 1499.5 | 394 | 181 | 370 | 468.5 | 1001.5 | | | | |
| *SBWG-12-2SD | | F-80 | 670 | 813 | 20-M42-63 | 1000 | | 711 | 1751 | 482 | 265 | 415 | 554 | 1255 | | | | |
| *SBWG-13-2SD | | | | | | 1000 | | 809 | 1944 | 546 | 301 | 515 | 609 | 1295 | | | | |

Size and component specification in this catalogue are subject to change without prior notice for quality improvement.
* Mark has been changed and updated.

## Feature >>>

- All mounting bases conform to ISO 5210/1 standards.
- All castings are ductile iron, Class 65-45-12 excellent strength and impact resistance.
- Worm gear material is available in two option.
  - Ductile iron,Class 80-55-06
  - Aluminum bronze, B148-C95800
- Worm is 1045 heat treated Carbon steel.
- Removable splined bushing to permit accurate positioning between gear drive and valve stem.
- Options include hand wheels, chain and etc.

### Bushing Type

Splines permit accurate alignment of valve stem key.

### M·O·V OPTION

Worm Gear can be provided with Motor actuator input flanges to accept standard ISO Mounting Base.

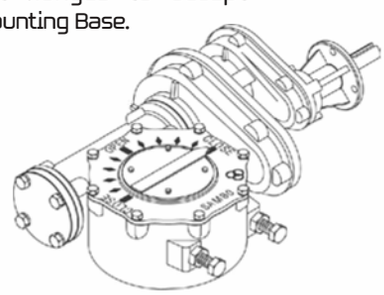

### LOCKING DEVICE OPTION

Input can be equipped with a Handwheel locking device for Manually operated units.

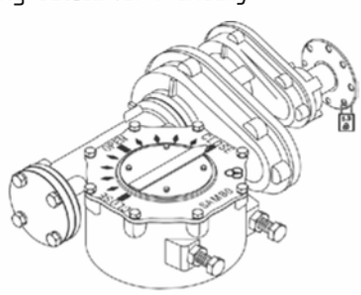

## Selection Chart for Manual Operation >>>

| SIZE / MODEL | GEAR RATIO (Changeable) | MAX. STEM ACCEPTANCE | BASE MOUNTING OPTION & STANDARD | MAX. TORQUE CAPACITY | | WEIGHT |
|---|---|---|---|---|---|---|
| | | | | N-m | Ft. lbf | Kg |
| SBWG-00-2SD | 320 : 1 | 36 (10X8) | F-10 , F-12 | 1200 | 885 | 16 |
| SBWG-01-2SD | 352 : 1 | 46 (14X9) | F-10 , F-12 , F-14 | 2000 | 1475 | 19 |
| SBWG-02-2SD | 616 : 1 | 60 (18X11) | F-12 , F-14 , F-16 | 2800 | 2065 | 29 |
| SBWG-03-2SD | 667.4 : 1 | 75 (20X12) | F-14 , F-16 , (F-20) | 4300 | 3172 | 38 |
| SBWG-35-2SD | 667.4 : 1 | 80 (22X14) | F-16 , (F-20) , F-25 | 6100 | 4499 | 60 |
| SBWG-04-2SD | 1275 : 1 | 95 (25X14) | F-16 , (F-20) , F-25 | 10400 | 7671 | 75 |
| *SBWG-05-2SD | 1368 : 1 | 115 (32X18) | (F-20), F-25 , F-30 | 15900 | 11727 | 97 |
| SBWG-55-2SD | 1413.6 : 1 | 125 (32X18) | F-25 , F-30 | 23500 | 17333 | 116 |
| SBWG-06-2SD | 3072 : 1 | 140 (36X20) | F-25 , F-30 , F-35 | 32800 | 24192 | 198 |
| SBWG-07-2SD | 3264 : 1 | 180 (45X25) | F-30 , F-35 , F-40 | 51100 | 37689 | 294 |
| SBWG-75-2SD | 6600 : 1 | 210 (50X28) | F-35 , F-40 , F-48 | 81500 | 60111 | 478 |
| SBWG-08-2SD | 6600 : 1 | 250 (56X32) | F-40 , F-48 | 121000 | 89245 | 601 |
| SBWG-09-2SD | 6600 : 1 | 280 (63X32) | F-48 , F-60 | 192500 | 141981 | 957 |
| SBWG-10-2SD | 8000 : 1 | 320 (70X36) | F-60 | 275000 | 202830 | 1536 |
| SBWG-11-2SD | 8500 : 1 | 360 (80X40) | F-60 | 442000 | 326002 | 2292 |
| *SBWG-12-2SD | 8750 : 1 | 400 (90X45) | F-60 , (F-80) | 610000 | 449913 | 3178 |
| *SBWG-13-2SD | 9000 : 1 | 420 (100X50) | F-60 , (F-80) | 970000 | 715435 | 4077 |

Size and component specification in this catalogue are subject to change without prior notice for quality improvement.
* Mark has been changed and updated.

# STANDARD TYPE-B

## Vertical Input with Double Reduction Gear Attachment

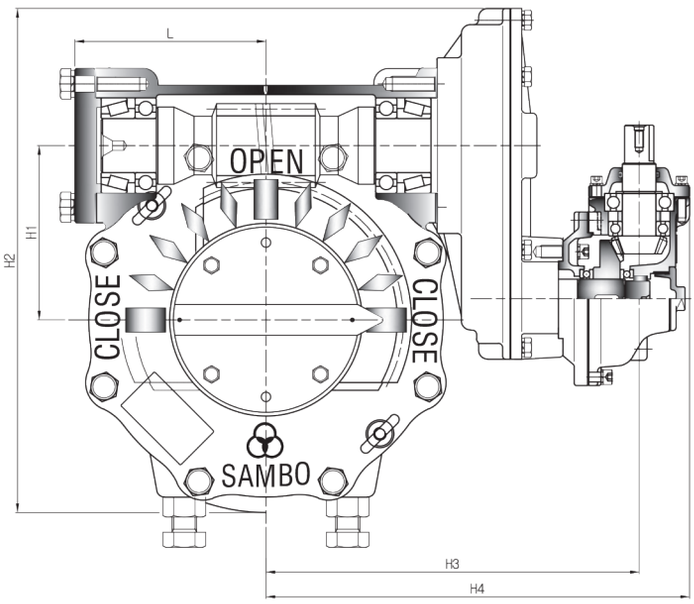


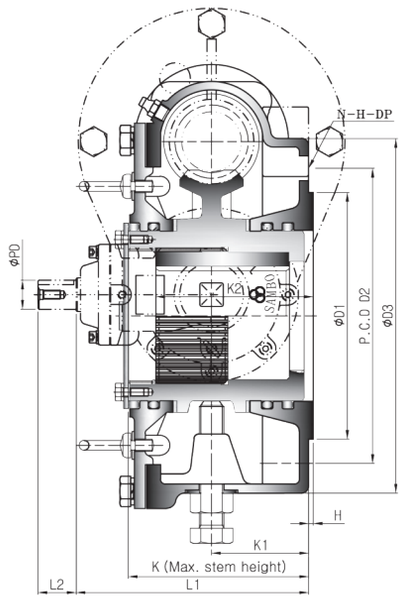


• Pin hole size is same as tap out diameter

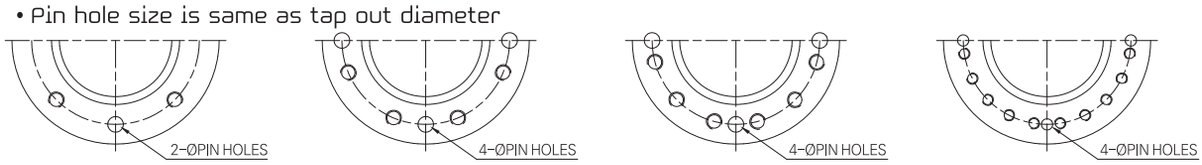


TYPE - A TYPE - B TYPE - C TYPE - D

## Dimension >>>

UNIT : mm

| MODEL \ DIM | BASE PART | | | | | | | EXTERNAL PART | | | | | | | | | INPUT SHAFT PART | | | HAND WHEEL |
|---|---|---|---|---|---|---|---|---|---|---|---|---|---|---|---|---|---|---|---|---|
| | TYPE | FLANGE | ØD1 | P.C.D ØD2 | P.C.D N-H-DP | ØD3 | H | H1 | H2 | H3 | H4 | K | K1 | K2 | L | L1 | L2 | ØPD | KEY | |
| SBWG-00-1S2B | A | F-12 | 85 | 125 | 4-M12-18 | 165 | 2 | 69.5 | 210 | 204 | 244 | 86.5 | 43 | 53.6 | 86 | 132 | 34 | 26 | 8X7 | 250 |
| SBWG-01-1S2B | | F-14 | 100 | 140 | 4-M16-24 | 190 | | 82.5 | 235.5 | 213 | 253 | 96 | 53 | 65 | 95 | 142 | | | | |
| SBWG-02-1S2B | | F-16 | 130 | 165 | 4-M20-30 | 220 | | 97 | 282 | 231.5 | 271.5 | 111.5 | 58 | 75.5 | 108 | 145 | 34 | 26 | 8X7 | 250 |
| SBWG-03-1S2B | B | F-16 (F-20) | 160 | 205 | 8-M16-24 | 250 | 3 | 112 | 312 | 241.5 | 281.5 | 118 | 61 | 87 | 118 | 148 | 34 | 26 | 8X7 | 250 |
| SBWG-35-1S2B | | F-25 | 200 | 254 | 8-M16-24 | 300 | | 127 | 352 | 259.5 | 299.5 | 135 | 72 | 100 | 125 | 161 | | | | |
| SBWG-04-1S2B | | F-25 | 200 | 254 | 8-M16-24 | 300 | | 153 | 417.5 | 308 | 358 | 147 | 73 | 120 | 153 | 194 | 34 | 26 | 8X7 | 300 |
| *SBWG-05-1S2B | | F-30 | 230 | 298 | 8-M20-30 | 350 | | 180 | 469.5 | 318 | 368 | 155 | 78 | 141 | 163 | 199 | | | | |
| SBWG-55-1S2B | | | | | | 350 | | 202 | 516.5 | 338 | 388 | 162 | 80 | 144 | 183 | 201 | | | | |
| SBWG-06-1S2B | | F-35 | 260 | 356 | 8-M30-45 | 415 | | 230 | 621 | 411.5 | 461.5 | 200 | 109 | 173 | 217 | 240 | 34 | 26 | 8X7 | 400 |
| SBWG-07-1S2B | | F-40 | 300 | 406 | 8-M36-55 | 475 | | 280.5 | 723 | 446.5 | 496.5 | 227 | 116 | 209 | 252 | 246 | | | | 500 |
| SBWG-75-1S2B | C | F-48 | 370 | 483 | 12-M36-55 | 560 | 5 | 326 | 860 | 558.5 | 623 | 246 | 120 | 220 | 279 | 308 | 34 | 32 | 10X8 | 630 |
| SBWG-08-1S2B | | | | | | 560 | | 379 | 968 | 593 | 658 | 254 | 125 | 245 | 314 | 313 | | | | |
| SBWG-09-1S2B | D | F-60 | 470 | 603 | 20-M36-55 | 700 | 5 | 448.5 | 1107.5 | 633 | 698 | 284 | 138 | 270 | 354 | 326 | 34 | 32 | 10X8 | 630 |
| SBWG-10-1S2B | | | | | | 800 | | 513 | 1291 | 839 | 904 | 352 | 164 | 330 | 426 | 384.5 | 34 | 32 | 10X8 | 710 |
| SBWG-11-1S2B | | | | | | 900 | | 616.5 | 1499.5 | 881.5 | 946.5 | 394 | 181 | 370 | 468.5 | 401.5 | | | | |
| *SBWG-12-1S2B | | F-80 | 670 | 813 | 20-M42-63 | 1000 | | 711 | 1751 | 1070 | 1153 | 482 | 265 | 415 | 554 | 536 | 44 | 38 | 12X8 | 800 |
| *SBWG-13-1S2B | | | | | | 1000 | | 809 | 1944 | 1132 | 1203 | 546 | 301 | 515 | 609 | 592 | | | | 900 |

Size and component specification in this catalogue are subject to change without prior notice for quality improvement.
* Mark has been changed and updated.

## Feature >>>

- All mounting bases conform to ISO 5210/1 standards.
- All castings are ductile iron, Class 65-45-12 excellent strength and impact resistance.
- Worm gear material is available in two option.
  - Ductile iron,Class 80-55-06
  - Aluminum bronze, B148-C95800
- Worm is 1045 heat treated Carbon steel.
- Removable splined bushing to permit accurate positioning between gear drive and valve stem.
- Options include hand wheels, chain and etc.

### Bushing Type

Splines permit accurate alignment of valve stem key.

### M·O·V OPTION

Worm Gear can be provided with Motor actuator input flanges to accept standard ISO Mounting Base.

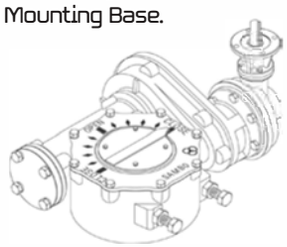

### SQUARE NUT OPTION

Input can be equipped with a Handwheel locking device for Manually operated units.

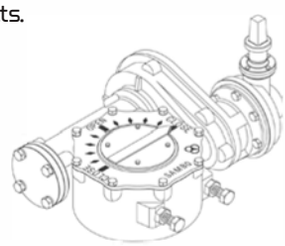

## Selection Chart for Manual Operation >>>

| SIZE / MODEL | GEAR RATIO | MAX. STEM ACCEPTANCE | BASE MOUNTING OPTION & STANDARD | MAX. TORQUE CAPACITY | | WEIGHT |
|---|---|---|---|---|---|---|
| | | | | N-m | Ft . lbf | Kg |
| SBWG-00-1S2B | 160 : 1 | 36 (10X8) | F-10 , F-12 | 1200 | 885 | 17 |
| SBWG-01-1S2B | 176 : 1 | 46 (14X9) | F-10 , F-12 , F-14 | 2000 | 1475 | 20 |
| SBWG-02-1S2B | 243.2 : 1 | 60 (18X11) | F-12 , F-14 , F-16 | 2800 | 2065 | 30 |
| SBWG-03-1S2B | 263.5 : 1 | 75 (20X12) | F-14 , F-16 , (F-20) | 4300 | 3172 | 38 |
| SBWG-35-1S2B | 263.5 : 1 | 80 (22X14) | F-16 , (F-20) , F-25 | 6100 | 4499 | 55 |
| SBWG-04-1S2B | 420 : 1 | 95 (25X14) | F-16 , (F-20) , F-25 | 10400 | 7671 | 74 |
| *SBWG-05-1S2B | 450 : 1 | 115 (32X18) | (F-20), F-25 , F-30 | 15900 | 11727 | 96 |
| SBWG-55-1S2B | 465 : 1 | 125 (32X18) | F-25 , F-30 | 23500 | 17333 | 115 |
| SBWG-06-1S2B | 768 : 1 | 140 (36X20) | F-25 , F-30 , F-35 | 32800 | 24192 | 185 |
| SBWG-07-1S2B | 816 : 1 | 180 (45X25) | F-30 , F-35 , F-40 | 51100 | 37689 | 281 |
| SBWG-75-1S2B | 1320 : 1 | 210 (50X28) | F-35 , F-40 , F-48 | 81500 | 60111 | 450 |
| SBWG-08-1S2B | 1320 : 1 | 250 (56X32) | F-40 , F-48 | 121000 | 89245 | 573 |
| SBWG-09-1S2B | 1320 : 1 | 280 (63X32) | F-48 , F-60 | 192500 | 141981 | 930 |
| SBWG-10-1S2B | 1600 : 1 | 320 (70X36) | F-60 | 275000 | 202830 | 1470 |
| SBWG-11-1S2B | 1700 : 1 | 360 (80X40) | F-60 | 442000 | 326002 | 2260 |
| *SBWG-12-1S2B | 1925 : 1 | 400 (90X45) | F-60 , (F-80) | 610000 | 449913 | 3158 |
| *SBWG-13-1S2B | 2160 : 1 | 420 (100X50) | F-60 , (F-80) | 970000 | 715435 | 4079 |

Size and component specification in this catalogue are subject to change without prior notice for quality improvement.
* Mark has been changed and updated.

# STANDARD TYPE-B

## Vertical Input with Triple Reduction Gear Attachment

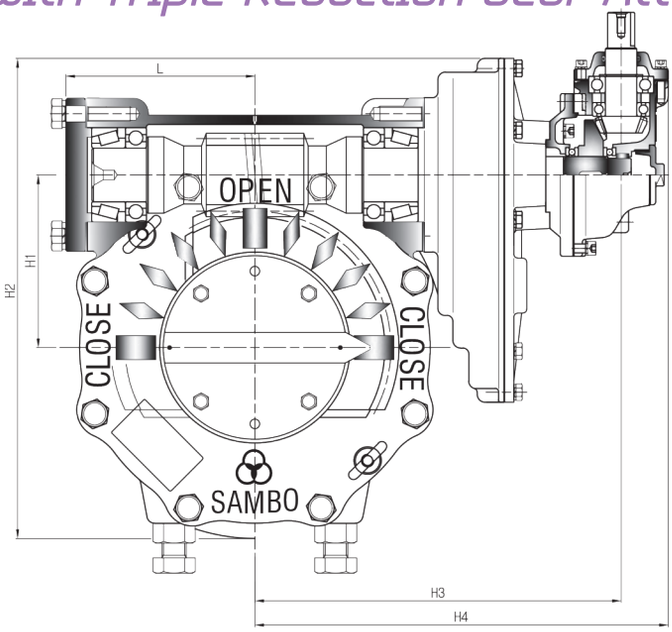


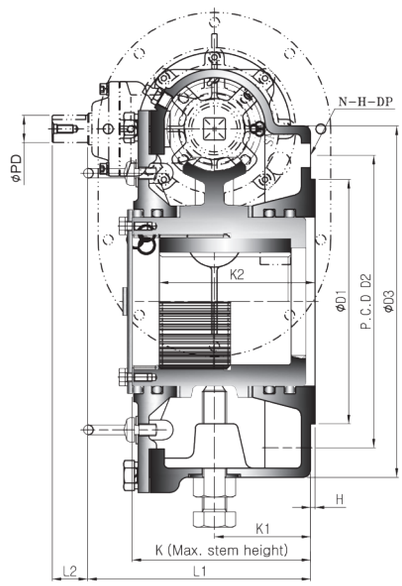


• Pin hole size is same as tap out diameter

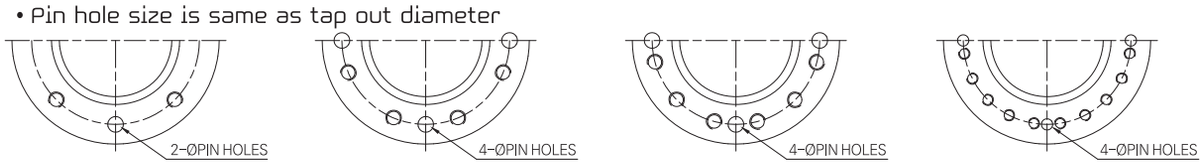


TYPE - A TYPE - B TYPE - C TYPE - D

## Dimension >>>

UNIT : mm

| MODEL \ DIM | BASE PART | | | | | | | EXTERNAL PART | | | | | | | | | INPUT SHAFT PART | | | HAND WHEEL |
|---|---|---|---|---|---|---|---|---|---|---|---|---|---|---|---|---|---|---|---|---|
| | TYPE | FLANGE | ØD1 | P.C.D ØD2 | P.C.D N-H-DP | ØD3 | H | H1 | H2 | H3 | H4 | K | K1 | K2 | L | L1 | L2 | ØPD | KEY | |
| SBWG-00-1SD2B | A | F-12 | 85 | 125 | 4-M12-18 | 165 | 2 | 69.5 | 210 | 221 | 261 | 86.5 | 43 | 53.6 | 86 | 132 | 34 | 26 | 8X7 | 250 |
| SBWG-01-1SD2B | | F-14 | 100 | 140 | 4-M16-24 | 190 | | 82.5 | 235.5 | 230 | 270 | 96 | 53 | 65 | 95 | 142 | | | | |
| SBWG-02-1SD2B | | F-16 | 130 | 165 | 4-M20-30 | 220 | | 97 | 282 | 255.5 | 295.5 | 111.5 | 58 | 75.5 | 108 | 145 | 34 | 26 | 8X7 | 250 |
| SBWG-03-1SD2B | B | F-16 (F-20) | 160 | 205 | 8-M16-24 | 250 | 3 | 112 | 312 | 265.5 | 305.5 | 118 | 61 | 87 | 118 | 148 | 34 | 26 | 8X7 | 250 |
| SBWG-35-1SD2B | | F-25 | 200 | 254 | 8-M16-24 | 300 | | 127 | 352 | 277.5 | 317.5 | 135 | 72 | 100 | 125 | 161 | | | | |
| SBWG-04-1SD2B | | F-25 | 200 | 254 | 8-M16-24 | 300 | | 153 | 417.5 | 344 | 394 | 147 | 73 | 120 | 153 | 194 | 34 | 26 | 8X7 | 300 |
| * SBWG-05-1SD2B | | F-30 | 230 | 298 | 8-M20-30 | 350 | | 180 | 469.5 | 354 | 404 | 155 | 78 | 141 | 163 | 199 | | | | |
| SBWG-55-1SD2B | | | | | | 350 | | 202 | 516.5 | 374 | 424 | 162 | 80 | 144 | 183 | 201 | | | | |
| SBWG-06-1SD2B | | F-35 | 260 | 356 | 8-M30-45 | 415 | | 230 | 621 | 438.5 | 488.5 | 200 | 109 | 173 | 217 | 240 | 34 | 26 | 8X7 | 400 |
| SBWG-07-1SD2B | | F-40 | 300 | 406 | 8-M36-55 | 475 | | 280.5 | 723 | 473.5 | 523.5 | 227 | 116 | 209 | 252 | 246 | | | | 500 |
| SBWG-75-1SD2B | C | F-48 | 370 | 483 | 12-M36-55 | 560 | 5 | 326 | 860 | 618.5 | 683.5 | 246 | 120 | 220 | 279 | 308 | 34 | 32 | 10X8 | 630 |
| SBWG-08-1SD2B | | | | | | 560 | | 379 | 968 | 653.5 | 718.5 | 254 | 125 | 245 | 314 | 313 | | | | |
| SBWG-09-1SD2B | D | F-60 | 470 | 603 | 20-M36-55 | 700 | 5 | 448.5 | 1107.5 | 693.5 | 758.5 | 284 | 138 | 270 | 354 | 326 | 34 | 32 | 10X8 | 630 |
| SBWG-10-1SD2B | | | | | | 800 | | 513 | 1291 | 893 | 958 | 352 | 164 | 330 | 426 | 384.5 | 34 | 32 | 10X8 | 710 |
| SBWG-11-1SD2B | | | | | | 900 | | 616.5 | 1499.5 | 935.5 | 1000.5 | 394 | 181 | 370 | 468.5 | 401.5 | | | | |
| * SBWG-12-1SD2B | | F-80 | 670 | 813 | 20-M42-63 | 1000 | | 711 | 1751 | 1135 | 1217.5 | 482 | 265 | 415 | 554 | 536 | 44 | 38 | 12X8 | 800 |
| * SBWG-13-1SD2B | | | | | | 1000 | | 809 | 1944 | 1187 | 1269.5 | 546 | 301 | 515 | 609 | 592 | | | | 900 |

Size and component specification in this catalogue are subject to change without prior notice for quality improvement.
* Mark has been changed and updated.

## Feature >>>

- All mounting bases conform to ISO 5210/1 standards.
- All castings are ductile iron, Class 65-45-12 excellent strength and impact resistance.
- Worm gear material is available in two option.
  - Ductile iron,Class 80-55-06
  - Aluminum bronze, B148-C95800
- Worm is 1045 heat treated Carbon steel.
- Removable splined bushing to permit accurate positioning between gear drive and valve stem.
- Options include hand wheels, chain and etc.

### Bushing Type

Splines permit accurate alignment of valve stem key.

### M·O·V OPTION

Worm Gear can be provided with Motor actuator input flanges to accept standard ISO Mounting Base.

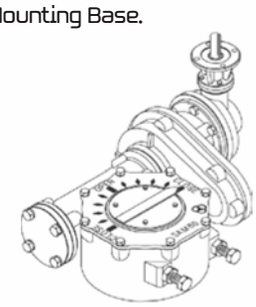

### SQUARE NUT OPTION

Input can be equipped with a Handwheel locking device for Manually operated units.

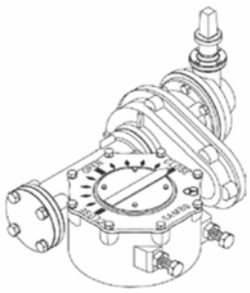

## Selection Chart for Manual Operation >>>

| SIZE / MODEL | MAX.GEAR RATIO (Change Able) | MAX. STEM ACCEPTANCE | BASE MOUNTING OPTION & STANDARD | MAX. TORQUE CAPACITY | | WEIGHT |
|---|---|---|---|---|---|---|
| | | | | N–m | Ft . lbf | Kg |
| SBWG–00–1SD2B | 320 : 1 | 36 (10X8) | F–10 , F–12 | 1200 | 885 | 19 |
| SBWG–01–1SD2B | 352 : 1 | 46 (14X9) | F–10 , F–12 , F–14 | 2000 | 1475 | 22 |
| SBWG–02–1SD2B | 616 : 1 | 60 (18X11) | F–12 , F–14 , F–16 | 2800 | 2065 | 32 |
| SBWG–03–1SD2B | 667 : 1 | 75 (20X12) | F–14 , F–16 , (F–20) | 4300 | 3172 | 40 |
| SBWG–35–1SD2B | 667 : 1 | 80 (22X14) | F–16 , (F–20) , F–25 | 6100 | 4499 | 57 |
| SBWG–04–1SD2B | 1260 : 1 | 95 (25X14) | F–16 , (F–20) , F–25 | 10400 | 7671 | 79 |
| * SBWG–05–1SD2B | 1350 : 1 | 115 (32X18) | (F–20), F–25 , F–30 | 15900 | 11727 | 101 |
| SBWG–55–1SD2B | 1395 : 1 | 125 (32X18) | F–25 , F–30 | 23500 | 17333 | 120 |
| SBWG–06–1SD2B | 3072 : 1 | 140 (36X20) | F–25 , F–30 , F–35 | 32800 | 24192 | 198 |
| SBWG–07–1SD2B | 3264 : 1 | 180 (45X25) | F–30 , F–35 , F–40 | 51100 | 37689 | 294 |
| SBWG–75–1SD2B | 6600 : 1 | 210 (50X28) | F–35 , F–40 , F–48 | 81500 | 60111 | 478 |
| SBWG–08–1SD2B | 6600 : 1 | 250 (56X32) | F–40 , F–48 | 121000 | 89245 | 602 |
| SBWG–09–1SD2B | 6600 : 1 | 280 (63X32) | F–48 , F–60 | 192500 | 141981 | 958 |
| SBWG–10–1SD2B | 8000 : 1 | 320 (70X36) | F–60 | 275000 | 202830 | 1508 |
| SBWG–11–1SD2B | 8500 : 1 | 360 (80X40) | F–60 | 442000 | 326002 | 2264 |
| * SBWG–12–1SD2B | 9625 : 1 | 400 (90X45) | F–60 , (F–80) | 610000 | 449913 | 3158 |
| * SBWG–13–1SD2B | 10800 : 1 | 420 (100X50) | F–60 , (F–80) | 970000 | 715435 | 4079 |

Size and component specification in this catalogue are subject to change without prior notice for quality improvement.
* Mark has been changed and updated.

# STANDARD TYPE-B

## Vertical Input with Single Reduction Gear Attachment

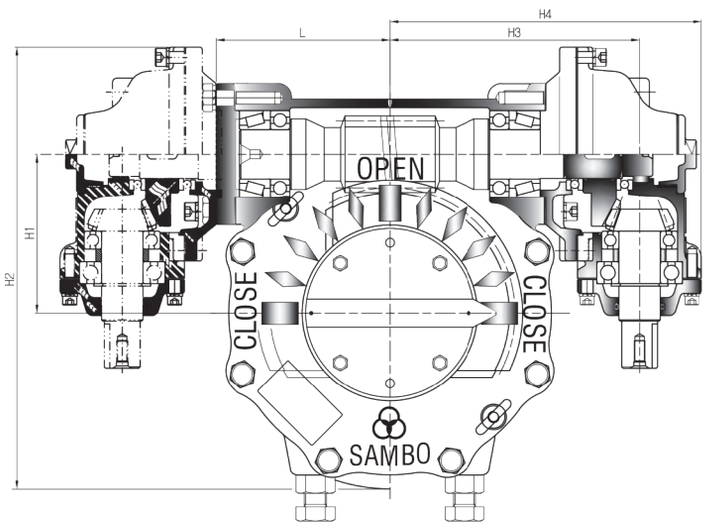


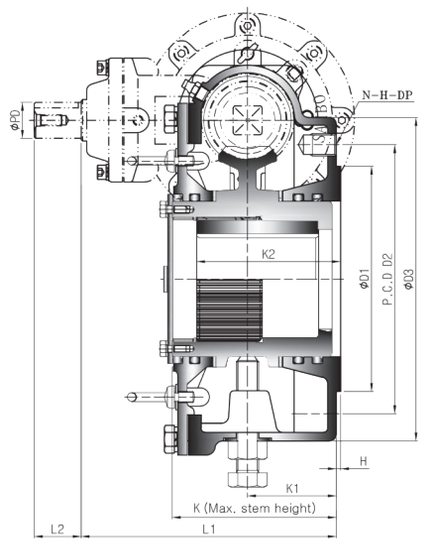


• Pin hole size is same as tap out diameter

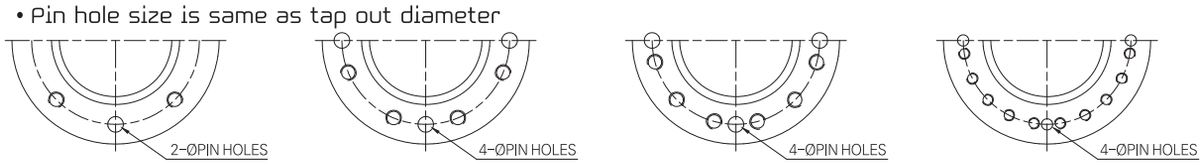


TYPE - A TYPE - B TYPE - C TYPE - D

## Dimension >>>

UNIT : mm

| MODEL \ DIM | BASE PART | | | | | | | EXTERNAL PART | | | | | | | | | INPUT SHAFT PART | | | HAND WHEEL |
|---|---|---|---|---|---|---|---|---|---|---|---|---|---|---|---|---|---|---|---|---|
| | TYPE | FLANGE | ØD1 | P.C.D ØD2 | P.C.D N-H-DP | ØD3 | H | H1 | H2 | H3 | H4 | K | K1 | K2 | L | L1 | L2 | ØPD | KEY | |
| SBWG-00-2B | A | F-12 | 85 | 125 | 4-M12-18 | 165 | 2 | 69.5 | 214.5 | 126 | 166 | 86.5 | 43 | 53.6 | 86 | 132 | 34 | 26 | 8X7 | 250 |
| SBWG-01-2B | | F-14 | 100 | 140 | 4-M16-24 | 190 | | 82.5 | 240 | 135 | 175 | 96 | 53 | 65 | 95 | 142 | | | | |
| SBWG-02-2B | | F-16 | 130 | 165 | 4-M20-30 | 220 | | 97 | 284.5 | 164 | 214 | 111.5 | 58 | 75.5 | 108 | 177 | 34 | 26 | 8X7 | 300 |
| SBWG-03-2B | B | F-16 (F-20) | 160 | 205 | 8-M16-24 | 250 | 3 | 112 | 314.5 | 174 | 224 | 118 | 61 | 87 | 118 | 180 | 34 | 26 | 8X7 | 300 |
| SBWG-35-2B | | F-25 | 200 | 254 | 8-M16-24 | 300 | | 127 | 354.5 | 192 | 242 | 135 | 72 | 100 | 125 | 193 | | | | |
| SBWG-04-2B | | F-25 | 200 | 254 | 8-M16-24 | 300 | | 153 | 406.5 | 212.5 | 262.5 | 147 | 73 | 120 | 153 | 204 | 34 | 26 | 8X7 | 400 |
| * SBWG-05-2B | | F-30 | 230 | 298 | 8-M20-30 | 350 | | 180 | 458.5 | 222.5 | 272.5 | 155 | 78 | 141 | 163 | 209 | | | | 500 |
| SBWG-55-2B | | | | | | 350 | | 202 | 505.5 | 242.5 | 292.5 | 162 | 80 | 144 | 183 | 211 | | | | |
| SBWG-06-2B | | F-35 | 260 | 356 | 8-M30-45 | 415 | | 230 | 598.5 | 312 | 377 | 200 | 109 | 173 | 217 | 297 | 34 | 32 | 10X8 | 630 |
| SBWG-07-2B | | F-40 | 300 | 406 | 8-M36-55 | 475 | | 280.5 | 700.5 | 347 | 412 | 227 | 116 | 209 | 252 | 303 | | | | 710 |
| SBWG-75-2B | C | F-48 | 370 | 483 | 12-M36-55 | 560 | 5 | 326 | 818.5 | 414 | 479 | 246 | 120 | 220 | 279 | 328 | 34 | 32 | 10X8 | 710 |
| SBWG-08-2B | | | | | | 560 | | 379 | 954 | 498 | 580.5 | 254 | 125 | 245 | 314 | 391 | 44 | 38 | 12X8 | 800 |
| SBWG-09-2B | D | F-60 | 470 | 603 | 20-M36-55 | 700 | 5 | 448.5 | 1118.5 | 550 | 632.5 | 284 | 138 | 270 | 354 | 429 | 44 | 38 | 12X8 | 900 |
| SBWG-10-2B | | | | | | 800 | | 513 | 1281 | 742 | 824.5 | 352 | 164 | 330 | 426 | 477 | 44 | 38 | 12X8 | 900 |
| SBWG-11-2B | | | | | | 900 | | 616.5 | 1489.5 | 784.5 | 867 | 394 | 181 | 370 | 468.5 | 494 | | | | |
| * SBWG-12-2B | | F-80 | 670 | 813 | 20-M42-63 | 1000 | | 711 | 1711 | 886 | 986 | 482 | 265 | 415 | 554 | 651 | 58 | 50 | 16X10 | 1000 |
| * SBWG-13-2B | | | | | | 1000 | | 809 | 1941.5 | 947 | 1047 | 546 | 301 | 515 | 609 | 710 | | | | |

Size and component specification in this catalogue are subject to change without prior notice for quality improvement.
* Mark has been changed and updated.

## Feature >>>

- All mounting bases conform to ISO 5210/1 standards.
- All castings are ductile iron, Class 65-45-12 excellent strength and impact resistance.
- Worm gear material is available in two option.
  - Ductile iron,Class 80-55-06
  - Aluminum bronze, B148-C95800
- Worm is 1045 heat treated Carbon steel.
- Removable splined bushing to permit accurate positioning between gear drive and valve stem.
- Options include hand wheels, chain and etc.

### Bushing Type

Splines permit accurate alignment of valve stem key.

### M·O·V OPTION

Worm Gear can be provided with Motor actuator input flanges to accept standard ISO Mounting Base.

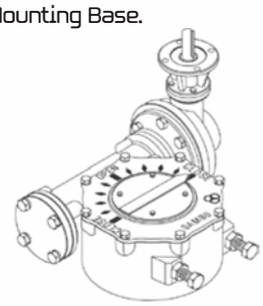

### SQUARE NUT OPTION

Input can be equipped with a Handwheel locking device for Manually operated units.

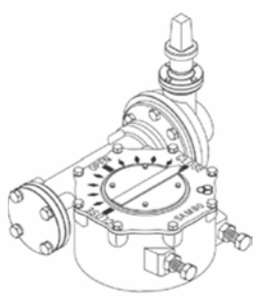

## Selection Chart for Manual Operation >>>

| SIZE / MODEL | GEAR RATIO | MAX. STEM ACCEPTANCE | BASE MOUNTING OPTION & STANDARD | MAX. TORQUE CAPACITY | | WEIGHT |
|---|---|---|---|---|---|---|
| | | | | N-m | Ft . lbf | Kg |
| SBWG-00-2B | 80 : 1 | 36 (10X8) | F-10 , F-12 | 1200 | 885 | 15 |
| SBWG-01-2B | 88 : 1 | 46 (14X9) | F-10 , F-12 , F-14 | 2000 | 1475 | 18 |
| SBWG-02-2B | 120 : 1 | 60 (18X11) | F-12 , F-14 , F-16 | 2800 | 2065 | 29 |
| SBWG-03-2B | 130 : 1 | 75 (20X12) | F-14 , F-16 , (F-20) | 4300 | 3172 | 37 |
| SBWG-35-2B | 130 : 1 | 80 (22X14) | F-16 , (F-20) , F-25 | 6100 | 4499 | 48 |
| SBWG-04-2B | 168 : 1 | 95 (25X14) | F-16 , (F-20) , F-25 | 10400 | 7671 | 66 |
| * SBWG-05-2B | 180 : 1 | 115 (32X18) | (F-20), F-25 , F-30 | 15900 | 11727 | 88 |
| SBWG-55-2B | 186 : 1 | 125 (32X18) | F-25 , F-30 | 23500 | 17333 | 107 |
| SBWG-06-2B | 256 : 1 | 140 (36X20) | F-25 , F-30 , F-35 | 32800 | 24192 | 175 |
| SBWG-07-2B | 272 : 1 | 180 (45X25) | F-30 , F-35 , F-40 | 51100 | 37689 | 271 |
| SBWG-75-2B | 330 : 1 | 210 (50X28) | F-35 , F-40 , F-48 | 81500 | 60111 | 390 |
| SBWG-08-2B | 363 : 1 | 250 (56X32) | F-40 , F-48 | 121000 | 89245 | 544 |
| SBWG-09-2B | 396 : 1 | 280 (63X32) | F-48 , F-60 | 192500 | 141981 | 920 |
| SBWG-10-2B | 416 : 1 | 320 (70X36) | F-60 | 275000 | 202830 | 1483 |
| SBWG-11-2B | 442 : 1 | 360 (80X40) | F-60 | 442000 | 326002 | 2239 |
| * SBWG-12-2B | 490 : 1 | 400 (90X45) | F-60 , (F-80) | 610000 | 449913 | 3116 |
| * SBWG-13-2B | 544 : 1 | 420 (100X50) | F-60 , (F-80) | 970000 | 715435 | 4118 |

Size and component specification in this catalogue are subject to change without prior notice for quality improvement.
* Mark has been changed and updated.

# STANDARD TYPE-C

## Vertical Input with Double Reduction Gear Attachment

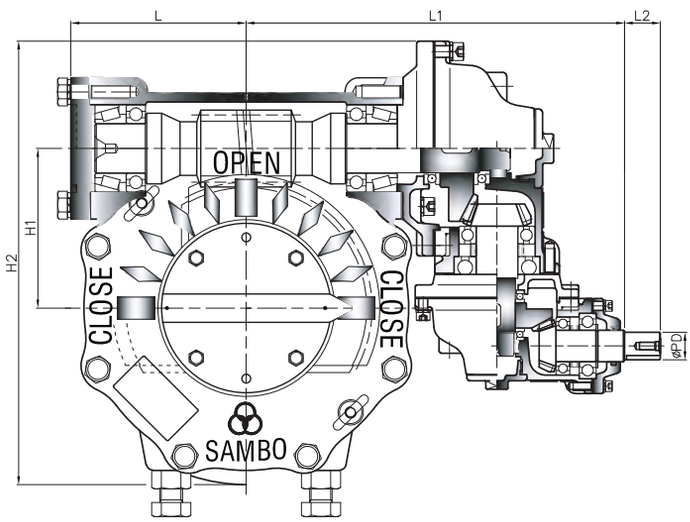


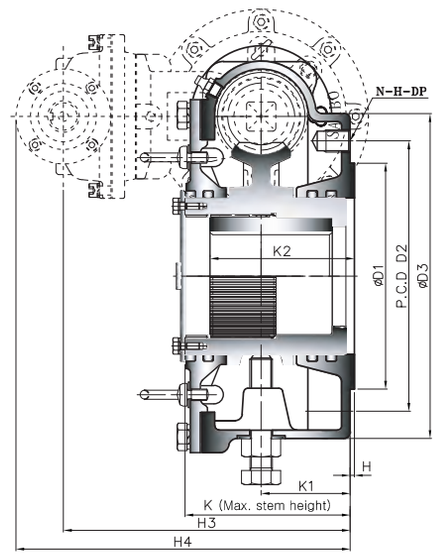


• Pin hole size is same as tap out diameter

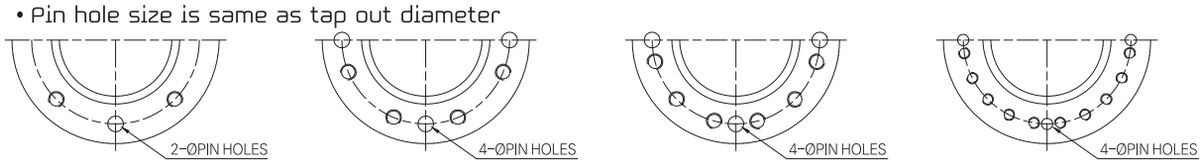


TYPE - A TYPE - B TYPE - C TYPE - D

## Dimension >>>

UNIT : mm

| MODEL \ DIM | BASE PART | | | | | | | EXTERNAL PART | | | | | | | | | INPUT SHAFT PART | | | HAND WHEEL |
|---|---|---|---|---|---|---|---|---|---|---|---|---|---|---|---|---|---|---|---|---|
| | TYPE | FLANGE | ØD1 | P.C.D ØD2 | P.C.D N-H-DP | ØD3 | H | H1 | H2 | H3 | H4 | K | K1 | K2 | L | L1 | L2 | ØPD | KEY | |
| SBWG-00-2BD | A | F-12 | 85 | 125 | 4-M12-18 | 165 | 2 | 69.5 | 214.5 | 162 | 202 | 86.5 | 43 | 53.6 | 86 | 215 | 34 | 26 | 8X7 | 250 |
| SBWG-01-2BD | | F-14 | 100 | 140 | 4-M16-24 | 190 | | 82.5 | 240 | 172 | 212 | 96 | 53 | 65 | 95 | 224 | | | | |
| SBWG-02-2BD | | F-16 | 130 | 165 | 4-M20-30 | 220 | | 97 | 284.5 | 202 | 242 | 111.5 | 58 | 75.5 | 108 | 253 | 34 | 26 | 8X7 | 250 |
| SBWG-03-2BD | B | F-16 (F-20) | 160 | 205 | 8-M16-24 | 250 | 3 | 112 | 314.5 | 205 | 245 | 118 | 61 | 87 | 118 | 263 | 34 | 26 | 8X7 | 250 |
| SBWG-35-2BD | | F-25 | 200 | 254 | 8-M16-24 | 300 | | 127 | 354.5 | 222 | 262 | 135 | 72 | 100 | 125 | 281 | | | | |
| SBWG-04-2BD | | F-25 | 200 | 254 | 8-M16-24 | 300 | | 153 | 406.5 | 242 | 292 | 147 | 73 | 120 | 153 | 333.5 | 34 | 26 | 8X7 | 300 |
| * SBWG-05-2BD | | F-30 | 230 | 298 | 8-M20-30 | 350 | | 180 | 458.5 | 247 | 297 | 155 | 78 | 141 | 163 | 343.5 | | | | |
| SBWG-55-2BD | | | | | | 350 | | 202 | 505.5 | 249 | 299 | 162 | 80 | 144 | 183 | 363.5 | | | | |
| SBWG-06-2BD | | F-35 | 260 | 356 | 8-M30-45 | 415 | | 230 | 598.5 | 332.5 | 382.5 | 200 | 109 | 173 | 217 | 442.5 | 34 | 26 | 8X7 | 400 |
| SBWG-07-2BD | | F-40 | 300 | 406 | 8-M36-55 | 475 | | 280.5 | 700.5 | 338.5 | 388.5 | 227 | 116 | 209 | 252 | 503.5 | | | | 500 |
| SBWG-75-2BD | C | F-48 | 370 | 483 | 12-M36-55 | 560 | 5 | 326 | 818.5 | 446.5 | 496.5 | 246 | 120 | 220 | 279 | 566 | 34 | 26 | 8X7 | 630 |
| SBWG-08-2BD | | | | | | 560 | | 379 | 954 | 475 | 530 | 254 | 125 | 245 | 314 | 678 | | 32 | 10X8 | |
| SBWG-09-2BD | D | F-60 | 470 | 603 | 20-M36-55 | 700 | 5 | 448.5 | 1118.5 | 496.5 | 561.5 | 284 | 138 | 270 | 354 | 738 | 34 | 32 | 10X8 | 710 |
| SBWG-10-2BD | | | | | | 800 | | 513 | 1281 | 563 | 628 | 352 | 164 | 330 | 426 | 922 | | | | |
| SBWG-11-2BD | | | | | | 900 | | 616.5 | 1489.5 | 580 | 645 | 394 | 181 | 370 | 468.5 | 965.5 | | | | |
| * SBWG-12-2BD | | F-80 | 670 | 813 | 20-M42-63 | 1000 | | 711 | 1711 | 771 | 853.5 | 482 | 265 | 415 | 554 | 1152 | 44 | 38 | 12X8 | 800 |
| * SBWG-13-2BD | | | | | | 1000 | | 809 | 1941.5 | 842 | 924.5 | 546 | 301 | 515 | 609 | 1238 | | | | 900 |

Size and component specification in this catalogue are subject to change without prior notice for quality improvement.
* Mark has been changed and updated.

## Feature >>>

- All mounting bases conform to ISO 5210/1 standards.
- All castings are ductile iron, Class 65-45-12 excellent strength and impact resistance.
- Worm gear material is available in two option.
  - Ductile iron,Class 80-55-06
  - Aluminum bronze, B148-C95800
- Worm is 1045 heat treated Carbon steel.
- Removable splined bushing to permit accurate positioning between gear drive and valve stem.
- Options include hand wheels, chain and etc.

### Bushing Type

Splines permit accurate alignment of valve stem key.

### M·O·V OPTION

Worm Gear can be provided with Motor actuator input flanges to accept standard ISO Mounting Base.

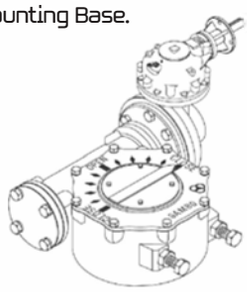

### LOCKING DEVICE OPTION

Input can be equipped with a Handwheel locking device for Manually operated units.

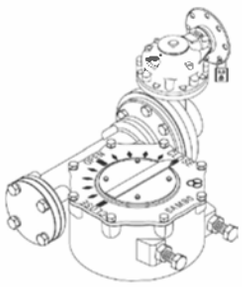

## Selection Chart for Manual Operation >>>

| SIZE / MODEL | GEAR RATIO | MAX. STEM ACCEPTANCE | BASE MOUNTING OPTION & STANDARD | MAX. TORQUE CAPACITY | | WEIGHT |
|---|---|---|---|---|---|---|
| | | | | N-m | Ft . lbf | Kg |
| SBWG-00-2BD | 160 : 1 | 36 (10X8) | F-10 , F-12 | 1200 | 885 | 20 |
| SBWG-01-2BD | 176 : 1 | 46 (14X9) | F-10 , F-12 , F-14 | 2000 | 1475 | 23 |
| SBWG-02-2BD | 240 : 1 | 60 (18X11) | F-12 , F-14 , F-16 | 2800 | 2065 | 34 |
| SBWG-03-2BD | 260 : 1 | 75 (20X12) | F-14 , F-16 , (F-20) | 4300 | 3172 | 42 |
| SBWG-35-2BD | 260 : 1 | 80 (22X14) | F-16 , (F-20) , F-25 | 6100 | 4499 | 53 |
| SBWG-04-2BD | 420 : 1 | 95 (25X14) | F-16 , (F-20) , F-25 | 10400 | 7671 | 74 |
| * SBWG-05-2BD | 450 : 1 | 115 (32X18) | (F-20), F-25 , F-30 | 15900 | 11727 | 96 |
| SBWG-55-2BD | 465 : 1 | 125 (32X18) | F-25 , F-30 | 23500 | 17333 | 115 |
| SBWG-06-2BD | 768 : 1 | 140 (36X20) | F-25 , F-30 , F-35 | 32800 | 24192 | 185 |
| SBWG-07-2BD | 816 : 1 | 180 (45X25) | F-30 , F-35 , F-40 | 51100 | 37689 | 281 |
| SBWG-75-2BD | 990 : 1 | 210 (50X28) | F-35 , F-40 , F-48 | 81500 | 60111 | 404 |
| SBWG-08-2BD | 1270.5 : 1 | 250 (56X32) | F-40 , F-48 | 121000 | 89245 | 564 |
| SBWG-09-2BD | 1584 : 1 | 280 (63X32) | F-48 , F-60 | 192500 | 141981 | 950 |
| SBWG-10-2BD | 2080 : 1 | 320 (70X36) | F-60 | 275000 | 202830 | 1523 |
| SBWG-11-2BD | 2210 : 1 | 360 (80X40) | F-60 | 442000 | 326002 | 2279 |
| * SBWG-12-2BD | 2695 : 1 | 400 (90X45) | F-60 , (F-80) | 610000 | 449913 | 3187 |
| * SBWG-13-2BD | 3264 : 1 | 420 (100X50) | F-60 , (F-80) | 970000 | 715435 | 4217 |

Size and component specification in this catalogue are subject to change without prior notice for quality improvement.
* Mark has been changed and updated.

# STANDARD TYPE-E

## Vertical Input with Single Reduction Gear Attachment

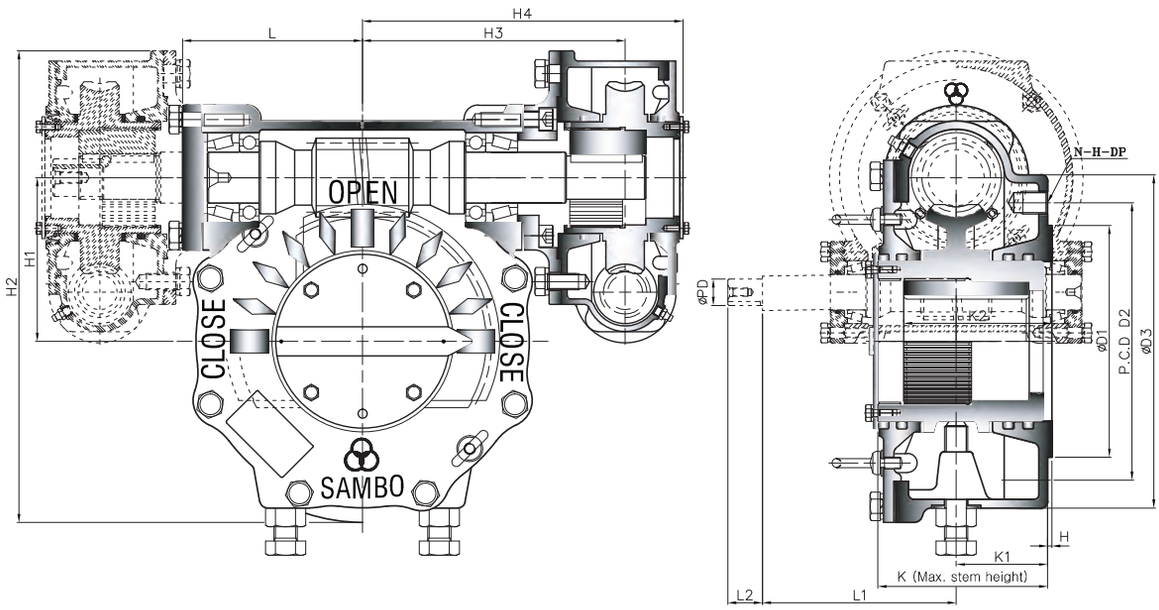


• Pin hole size is same as tap out diameter

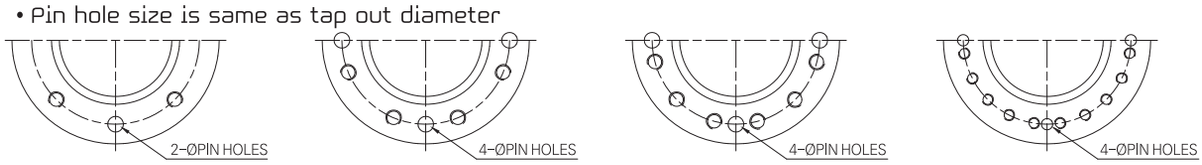


TYPE - A TYPE - B TYPE - C TYPE - D

## Dimension >>>

UNIT : mm

| MODEL \ DIM | TYPE | FLANGE | ØD1 | P.C.D ØD2 | P.C.D N-H-DP | ØD3 | H | H1 | H2 | H3 | H4 | K | K1 | K2 | L | L1 | L2 | ØPD | KEY | HAND WHEEL |
|---|---|---|---|---|---|---|---|---|---|---|---|---|---|---|---|---|---|---|---|---|
| | BASE PART | | | | | | | EXTERNAL PART | | | | | | | | | INPUT SHAFT PART | | | |
| SBWG-00-3W | A | F-12 | 85 | 125 | 4-M12-18 | 165 | 2 | 69.5 | 219.5 | 133 | 174 | 86.5 | 43 | 53.6 | 86 | 104.5 | 24 | 16 | 6X6 | 250 |
| SBWG-01-3W | | F-14 | 100 | 140 | 4-M16-24 | 190 | | 82.5 | 245 | 142 | 183 | 96 | 53 | 65 | 95 | 104.5 | | | | |
| SBWG-02-3W | | F-16 | 130 | 165 | 4-M20-30 | 220 | | 97 | 289.5 | 173 | 219 | 111.5 | 58 | 75.5 | 108 | 138 | 29 | 21 | 6X6 | 300 |
| SBWG-03-3W | B | F-16 (F-20) | 160 | 205 | 8-M16-24 | 250 | 3 | 112 | 319.5 | 183 | 229 | 118 | 61 | 87 | 118 | 138 | 29 | 21 | 6X6 | 300 |
| SBWG-35-3W | | F-25 | 200 | 254 | 8-M16-24 | 300 | | 127 | 359.5 | 203 | 248 | 126 | 63 | 91 | 125 | 147 | | | | 400 |
| SBWG-04-3W | | F-25 | 200 | 254 | 8-M16-24 | 300 | | 153 | 425.5 | 235 | 291 | 147 | 73 | 120 | 153 | 166 | 34 | 26 | 8X7 | 500 |
| * SBWG-05-3W | | F-30 | 230 | 298 | 8-M20-30 | 350 | | 180 | 477.5 | 245 | 301 | 155 | 78 | 141 | 163 | 166 | | | | |
| SBWG-55-3W | | | | | | 350 | | 202 | 539.5 | 273 | 332 | 162 | 80 | 144 | 183 | 176 | | | | 560 |
| SBWG-06-3W | | F-35 | 260 | 356 | 8-M30-45 | 415 | | 230 | 606 | 375 | 442 | 200 | 109 | 173 | 217 | 181 | | | | 560 |
| SBWG-07-3W | | F-40 | 300 | 406 | 8-M36-55 | 475 | | 280.5 | 708 | 410 | 477 | 227 | 116 | 209 | 252 | 181 | | | | |
| SBWG-75-3W | C | F-48 | 370 | 483 | 12-M36-55 | 560 | 5 | 326 | 828.5 | 393 | 470 | 246 | 120 | 220 | 279 | 207 | 34 | 32 | 10X8 | 630 |
| SBWG-08-3W | | | | | | 560 | | 379 | 961.5 | 438 | 518 | 254 | 125 | 245 | 314 | 217 | | | | 710 |
| SBWG-09-3W | D | F-60 | 470 | 603 | 20-M36-55 | 700 | 5 | 448.5 | 1126 | 480 | 568 | 284 | 138 | 270 | 354 | 237 | 34 | 32 | 10X8 | 710 |
| SBWG-10-3W | | | | | | 800 | | 513 | 1279.5 | 674 | 769.5 | 352 | 164 | 330 | 426 | 286 | 44 | 38 | 12X8 | 800 |
| SBWG-11-3W | | | | | | 900 | | 616.5 | 1539.5 | 722.5 | 843.5 | 400 | 181 | 370 | 468.5 | 341 | | | | 900 |
| * SBWG-12-3W | | F-80 | 670 | 813 | 20-M42-63 | 1000 | | 711 | 1781 | 805 | 935.5 | 484 | 265 | 455 | 554 | 381 | 58 | 50 | 16X10 | 1000 |
| * SBWG-13-3W | | | | | | 1000 | | 809 | 2034 | 850 | 985.5 | 546 | 301 | 515 | 609 | 416 | | | | |

Size and component specification in this catalogue are subject to change without prior notice for quality improvement.
* Mark has been changed and updated.

## Feature >>>

- All mounting bases conform to ISO 5210/1 standards.
- All castings are ductile iron, Class 65-45-12 excellent strength and impact resistance.
- Worm gear material is available in two option.
  - Ductile iron,Class 80-55-06
  - Aluminum bronze, B148-C95800
- Worm is 1045 heat treated Carbon steel.
- Removable splined bushing to permit accurate positioning between gear drive and valve stem.
- Options include hand wheels, chain and etc.

### Bushing Type

Splines permit accurate alignment of valve stem key.

### M·O·V OPTION

Worm Gear can be provided with Motor actuator input flanges to accept standard ISO Mounting Base.

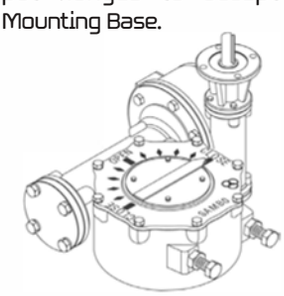

### LOCKING DEVICE OPTION

Input can be equipped with a Handwheel locking device for Manually operated units.

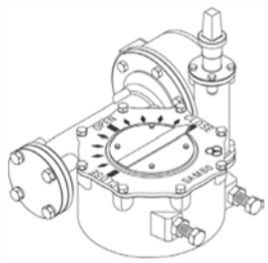

## Selection Chart for Manual Operation >>>

| SIZE / MODEL | GEAR RATIO | MAX. STEM ACCEPTANCE | BASE MOUNTING OPTION & STANDARD | MAX. TORQUE CAPACITY | | WEIGHT |
|---|---|---|---|---|---|---|
| | | | | N-m | Ft . lbf | Kg |
| SBWG-00-3W | 1440 : 1 | 36 (10X8) | F-10 , F-12 | 1200 | 885 | 15 |
| SBWG-01-3W | 1584 : 1 | 46 (14X9) | F-10 , F-12 , F-14 | 2000 | 1475 | 18 |
| SBWG-02-3W | 1920 : 1 | 60 (18X11) | F-12 , F-14 , F-16 | 2800 | 2065 | 30 |
| SBWG-03-3W | 2080 : 1 | 75 (20X12) | F-14 , F-16 , (F-20) | 4300 | 3172 | 38 |
| SBWG-35-3W | 2288 : 1 | 80 (22X14) | F-16 , (F-20) , F-25 | 6100 | 4499 | 56 |
| SBWG-04-3W | 2688 : 1 | 95 (25X14) | F-16 , (F-20) , F-25 | 10400 | 7671 | 77 |
| * SBWG-05-3W | 2880 : 1 | 115 (32X18) | (F-20), F-25 , F-30 | 15900 | 11727 | 99 |
| SBWG-55-3W | 3224 : 1 | 125 (32X18) | F-25 , F-30 | 23500 | 17333 | 126 |
| SBWG-06-3W | 3328 : 1 | 140 (36X20) | F-25 , F-30 , F-35 | 32800 | 24192 | 179 |
| SBWG-07-3W | 3536 : 1 | 180 (45X25) | F-30 , F-35 , F-40 | 51100 | 37689 | 275 |
| SBWG-75-3W | 3696 : 1 | 210 (50X28) | F-35 , F-40 , F-48 | 81500 | 60111 | 406 |
| SBWG-08-3W | 3960 : 1 | 250 (56X32) | F-40 , F-48 | 121000 | 89245 | 551 |
| SBWG-09-3W | 4092 : 1 | 280 (63X32) | F-48 , F-60 | 192500 | 141981 | 926 |
| SBWG-10-3W | 4096 : 1 | 320 (70X36) | F-60 | 275000 | 202830 | 1476 |
| SBWG-11-3W | 4624 : 1 | 360 (80X40) | F-60 | 442000 | 326002 | 2328 |
| * SBWG-12-3W | 4620 : 1 | 400 (90X45) | F-60 , (F-80) | 610000 | 449913 | 3251 |
| * SBWG-13-3W | 4752 : 1 | 420 (100X50) | F-60 , (F-80) | 970000 | 715435 | 4273 |

Size and component specification in this catalogue are subject to change without prior notice for quality improvement.
* Mark has been changed and updated.

# STANDARD TYPE-E

## Vertical Input with Double Reduction Gear Attachment

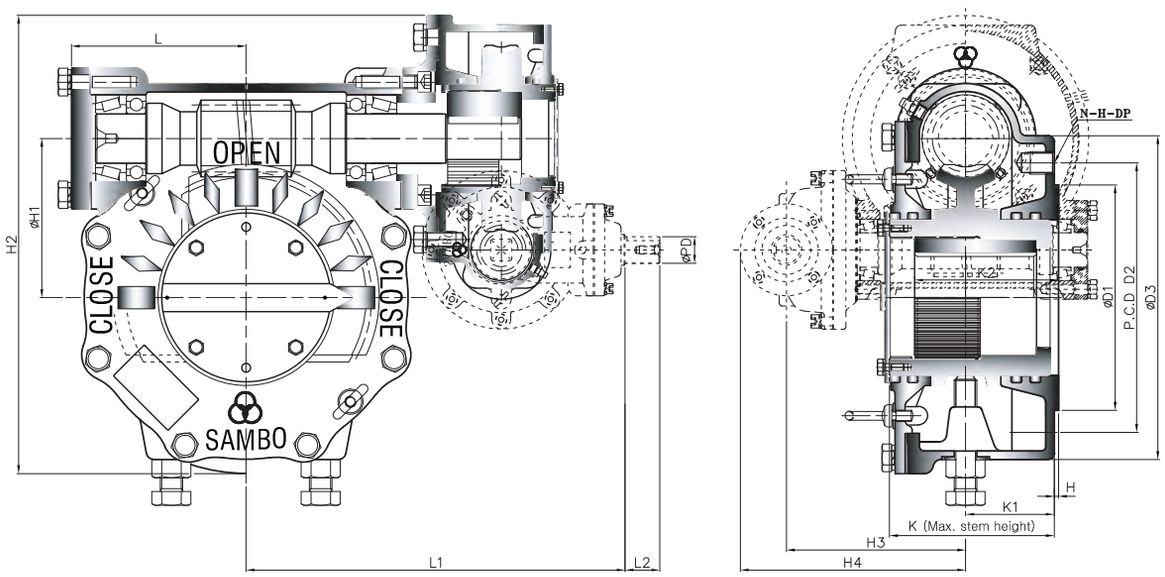


• Pin hole size is same as tap out diameter

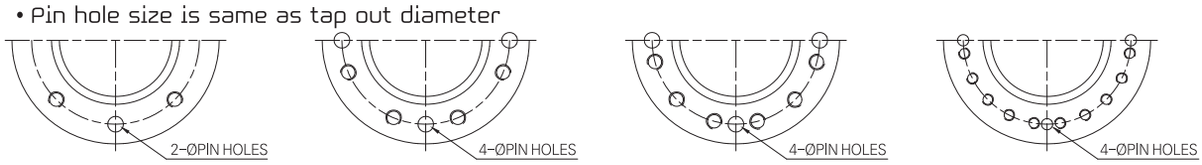


TYPE - A TYPE - B TYPE - C TYPE - D

## Dimension >>>

UNIT : mm

| MODEL \ DIM | BASE PART | | | | | | | EXTERNAL PART | | | | | | | | | INPUT SHAFT PART | | | HAND WHEEL |
|---|---|---|---|---|---|---|---|---|---|---|---|---|---|---|---|---|---|---|---|---|
| | TYPE | FLANGE | ØD1 | P.C.D ØD2 | P.C.D N-H-DP | ØD3 | H | H1 | H2 | H3 | H4 | K | K1 | K2 | L | L1 | L2 | ØPD | KEY | |
| SBWG-00-3W2B | A | F-12 | 85 | 125 | 4-M12-18 | 165 | 2 | 69.5 | 219.5 | 113.5 | 153.5 | 86.5 | 43 | 53.6 | 86 | 222 | 34 | 26 | 8X7 | 250 |
| SBWG-01-3W2B | | F-14 | 100 | 140 | 4-M16-24 | 190 | | 82.5 | 245 | 113.5 | 153.5 | 96 | 53 | 65 | 95 | 231 | | | | 250 |
| SBWG-02-3W2B | | F-16 | 130 | 165 | 4-M20-30 | 220 | | 97 | 289.5 | 126 | 166 | 111.5 | 58 | 75.5 | 108 | 262 | 34 | 26 | 8X7 | 250 |
| SBWG-03-3W2B | B | F-16 (F-20) | 160 | 205 | 8-M16-24 | 250 | 3 | 112 | 319.5 | 126 | 166 | 118 | 61 | 87 | 118 | 272 | 34 | 26 | 8X7 | 250 |
| SBWG-35-3W2B | | F-25 | 200 | 254 | 8-M16-24 | 300 | | 127 | 359.5 | 135 | 175 | 126 | 63 | 91 | 125 | 292 | | | | 250 |
| SBWG-04-3W2B | | F-25 | 200 | 254 | 8-M16-24 | 300 | | 153 | 425.5 | 164 | 214 | 147 | 73 | 120 | 153 | 356 | | | | 300 |
| * SBWG-05-3W2B | | F-30 | 230 | 298 | 8-M20-30 | 350 | | 180 | 477.5 | 164 | 214 | 155 | 78 | 141 | 163 | 366 | | | | 300 |
| SBWG-55-3W2B | | | | | | 350 | | 202 | 539.5 | 174 | 224 | 162 | 80 | 144 | 183 | 394 | | | | 300 |
| SBWG-06-3W2B | | F-35 | 260 | 356 | 8-M30-45 | 415 | | 230 | 606 | 192 | 232 | 200 | 109 | 173 | 217 | 496 | | | | 400 |
| SBWG-07-3W2B | | F-40 | 300 | 406 | 8-M36-55 | 475 | | 280.5 | 708 | 192 | 232 | 227 | 116 | 209 | 252 | 531 | | | | 500 |
| SBWG-75-3W2B | C | F-48 | 370 | 483 | 12-M36-55 | 560 | 5 | 326 | 828.5 | 212.5 | 262.5 | 246 | 120 | 220 | 279 | 524 | 34 | 26 | 8X7 | 630 |
| SBWG-08-3W2B | | | | | | 560 | | 379 | 961.5 | 222.5 | 272.5 | 254 | 125 | 245 | 314 | 569 | | | | 630 |
| SBWG-09-3W2B | D | F-60 | 470 | 603 | 20-M36-55 | 700 | 5 | 448.5 | 1126 | 242.5 | 292.5 | 284 | 138 | 270 | 354 | 611 | 34 | 26 | 8X7 | 630 |
| SBWG-10-3W2B | | | | | | 800 | | 513 | 1279.5 | 312 | 377 | 352 | 164 | 330 | 426 | 862 | 34 | 32 | 10X8 | 710 |
| SBWG-11-3W2B | | | | | | 900 | | 616.5 | 1539.5 | 347 | 412 | 400 | 181 | 370 | 468.5 | 910.5 | | | | |
| * SBWG-12-3W2B | | F-80 | 670 | 813 | 20-M42-63 | 1000 | | 711 | 1781 | 380 | 445 | 484 | 265 | 455 | 554 | 1013 | 34 | 32 | 10X8 | 800 |
| * SBWG-13-3W2B | | | | | | 1000 | | 809 | 2033 | 466 | 548.5 | 546 | 301 | 515 | 609 | 1116 | 44 | 38 | 12X8 | 800 |

Size and component specification in this catalogue are subject to change without prior notice for quality improvement.
* Mark has been changed and updated.

## Feature >>>

- All mounting bases conform to ISO 5210/1 standards.
- All castings are ductile iron, Class 65-45-12 excellent strength and impact resistance.
- Worm gear material is available in two option.
  - Ductile iron,Class 80-55-06
  - Aluminum bronze, B148-C95800
- Worm is 1045 heat treated Carbon steel.
- Removable splined bushing to permit accurate positioning between gear drive and valve stem.
- Options include hand wheels, chain and etc.

### Bushing Type

Splines permit accurate alignment of valve stem key.

### M·O·V OPTION

Worm Gear can be provided with Motor actuator input flanges to accept standard ISO Mounting Base.

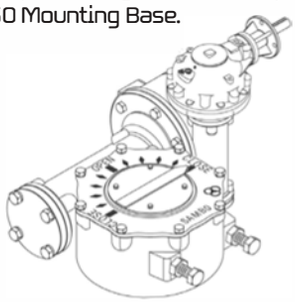

### LOCKING DEVICE OPTION

Input can be equipped with a Handwheel locking device for Manually operated units.

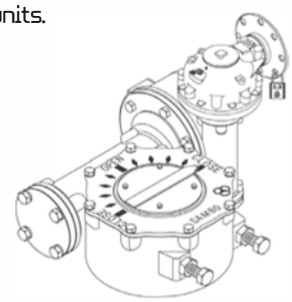

## Selection Chart for Manual Operation >>>

| SIZE / MODEL | GEAR RATIO | MAX. STEM ACCEPTANCE | BASE MOUNTING OPTION & STANDARD | MAX. TORQUE CAPACITY | | WEIGHT |
|---|---|---|---|---|---|---|
| | | | | N–m | Ft . lbf | Kg |
| SBWG–00–3W2B | 1440 : 1 | 36 (10X8) | F–10 , F–12 | 1200 | 885 | 20 |
| SBWG–01–3W2B | 1584 : 1 | 46 (14X9) | F–10 , F–12 , F–14 | 2000 | 1475 | 23 |
| SBWG–02–3W2B | 1920 : 1 | 60 (18X11) | F–12 , F–14 , F–16 | 2800 | 2065 | 35 |
| SBWG–03–3W2B | 2080 : 1 | 75 (20X12) | F–14 , F–16 , (F–20) | 4300 | 3172 | 43 |
| SBWG–35–3W2B | 2288 : 1 | 80 (22X14) | F–16 , (F–20) , F–25 | 6100 | 4499 | 60 |
| SBWG–04–3W2B | 3360 : 1 | 95 (25X14) | F–16 , (F–20) , F–25 | 10400 | 7671 | 85 |
| * SBWG–05–3W2B | 3600 : 1 | 115 (32X18) | (F–20), F–25 , F–30 | 15900 | 11727 | 107 |
| SBWG–55–3W2B | 4030 : 1 | 125 (32X18) | F–25 , F–30 | 23500 | 17333 | 134 |
| SBWG–06–3W2B | 4160 : 1 | 140 (36X20) | F–25 , F–30 , F–35 | 32800 | 24192 | 187 |
| SBWG–07–3W2B | 4420 : 1 | 180 (45X25) | F–30 , F–35 , F–40 | 51100 | 37689 | 283 |
| SBWG–75–3W2B | 5544 : 1 | 210 (50X28) | F–35 , F–40 , F–48 | 81500 | 60111 | 416 |
| SBWG–08–3W2B | 5940 : 1 | 250 (56X32) | F–40 , F–48 | 121000 | 89245 | 561 |
| SBWG–09–3W2B | 6138 : 1 | 280 (63X32) | F–48 , F–60 | 192500 | 141981 | 936 |
| SBWG–10–3W2B | 8192 : 1 | 320 (70X36) | F–60 | 275000 | 202830 | 1506 |
| SBWG–11–3W2B | 9248 : 1 | 360 (80X40) | F–60 | 442000 | 326002 | 2358 |
| * SBWG–12–3W2B | 11550 : 1 | 400 (90X45) | F–60 , (F–80) | 610000 | 449913 | 3291 |
| * SBWG–13–3W2B | 13068 : 1 | 420 (100X50) | F–60 , (F–80) | 970000 | 715435 | 4313 |

Size and component specification in this catalogue are subject to change without prior notice for quality improvement.
* Mark has been changed and updated.

# PART TURN 135°

## Horizontal Input

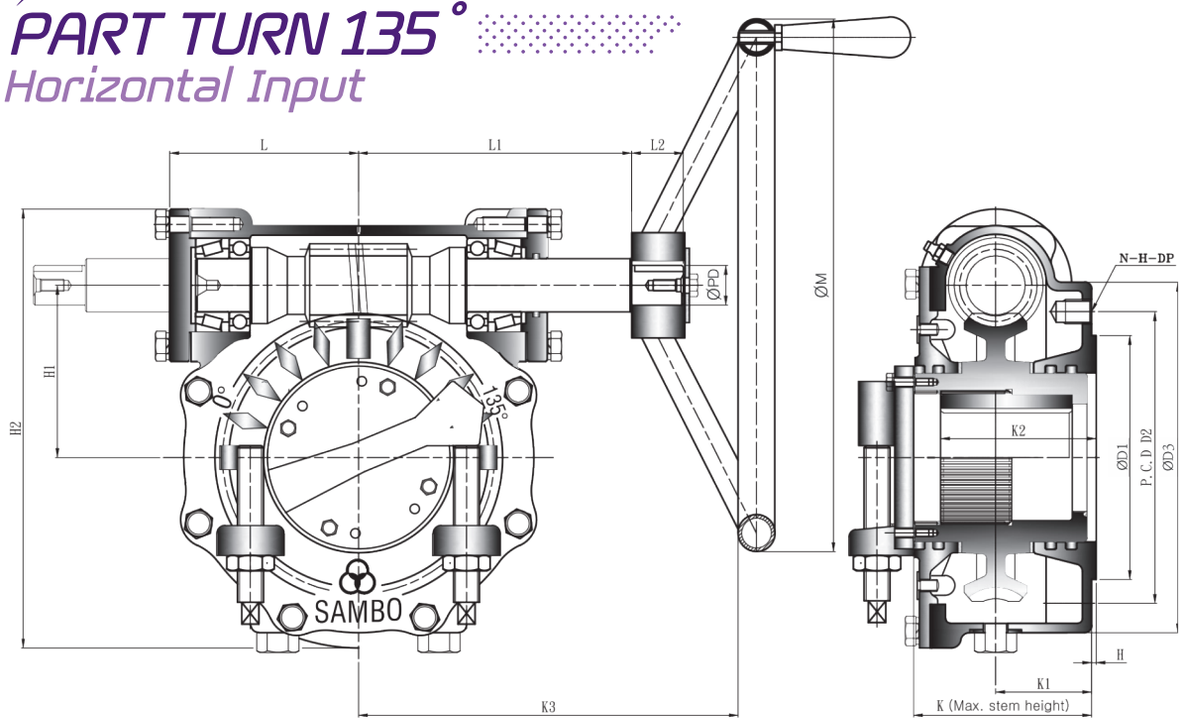


• Pin hole size is same as tap out diameter

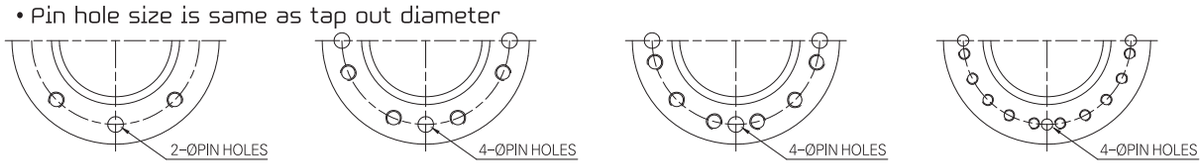


TYPE - A TYPE - B TYPE - C TYPE - D

## Dimension >>>

UNIT : mm

| MODEL \ DIM | BASE PART | | | | | | | EXTERNAL PART | | | | | | | | INPUT SHAFT PART | | | HAND WHEEL |
|---|---|---|---|---|---|---|---|---|---|---|---|---|---|---|---|---|---|---|---|
| | TYPE | FLANGE | ØD1 | P.C.D ØD2 | P.C.D N-H-DP | ØD3 | H | H1 | H2 | K | K1 | K2 | K3 | L | L1 | L2 | ØPD | KEY | |
| * SBWG-BF 135 | A | F-07 | 55 | 70 | 4-M8-12 | 110 | 2 | 42 | 132 | 76 | 38 | 38.6 | 150 | 64 | 97 | 24 | 16 | 6X6 | 200 |
| SBWG-0 135 | | F-10 | 70 | 102 | 4-M10-15 | 135 | | 57 | 159.5 | 77 | 38 | 43.6 | 177 | 71.5 | 104.5 | | | | 250 |
| SBWG-00 135 | | F-12 | 85 | 125 | 4-M12-18 | 165 | | 69.5 | 192 | 86.5 | 43 | 53.6 | 230 | 86 | 138 | 29 | 21 | 6X6 | 300 |
| SBWG-01 135 | | F-14 | 100 | 140 | 4-M16-24 | 190 | | 82.5 | 217.5 | 96 | 53 | 65 | 260 | 95 | 147 | | | | 400 |
| SBWG-02 135 | | F-16 | 130 | 165 | 4-M20-30 | 220 | | 97 | 257 | 111.5 | 58 | 75.5 | 294 | 108 | 166 | 34 | 26 | 8X7 | 500 |
| SBWG-03 135 | B | F-16 (F-20) | 160 | 205 | 8-M16-24 | 250 | 3 | 112 | 287 | 118 | 61 | 87 | 324 | 118 | 176 | 34 | 26 | 8X7 | 560 |
| SBWG-35 135 | | F-25 | 200 | 254 | 8-M16-24 | 300 | | 127 | 327 | 135 | 72 | 100 | 342 | 136 | 194 | | | | |
| SBWG-04 135 | | F-25 | 200 | 254 | 8-M16-24 | 300 | | 153 | 385.5 | 147 | 73 | 120 | 370 | 153 | 207 | 34 | 32 | 10X8 | 630 |
| * SBWG-05 135 | | F-30 | 230 | 298 | 8-M20-30 | 350 | | 180 | 437.5 | 155 | 78 | 141 | 400 | 163 | 217 | | | | 710 |
| SBWG-55 135 | | | | | | 350 | | 202 | 484.5 | 162 | 80 | 144 | 420 | 183 | 237 | | | | |
| SBWG-06 135 | | F-35 | 260 | 356 | 8-M30-45 | 415 | | 230 | 558.5 | 200 | 109 | 173 | 489 | 217 | 286 | 44 | 38 | 12X8 | 800 |
| SBWG-07 135 | | F-40 | 300 | 406 | 8-M36-55 | 475 | | 280.5 | 660.5 | 227 | 116 | 209 | 538 | 252 | 320 | | | | 900 |
| SBWG-75 135 | C | F-48 | 370 | 483 | 12-M36-55 | 560 | 5 | 326 | 776 | 246 | 120 | 220 | 617 | 279 | 381 | 58 | 50 | 16X10 | 1000 |
| SBWG-08 135 | | | | | | 560 | | 379 | 884 | 254 | 125 | 245 | 652 | 314 | 416 | | | | |
| SBWG-09 135 | D | F-60 | 470 | 603 | 20-M36-55 | 700 | 5 | 448.5 | 1023.5 | 284 | 138 | 270 | 692 | 354 | 456 | 58 | 50 | 16X10 | 1000 |
| SBWG-10 135 | | | | | | 800 | | 513 | 1191 | 352 | 164 | 330 | 814 | 426 | 614 | | | | |
| SBWG-11 135 | | | | | | 900 | | 616.5 | 1399.5 | 394 | 181 | 370 | 857 | 468.5 | 657 | | | | |
| * SBWG-12 135 | | F-80 | 670 | 813 | 20-M42-63 | 1000 | | 711 | 1621 | 482 | 265 | 415 | 980 | 554 | 702 | | | | |
| * SBWG-13 135 | | | | | | 1000 | | 809 | 1814 | 546 | 301 | 515 | 988 | 609 | 752 | | | | |

Size and component specification in this catalogue are subject to change without prior notice for quality improvement.
* Mark has been changed and updated.

## Feature >>>

- All mounting bases conform to ISO 5210/1 standards.
- All castings are ductile iron, Class 65-45-12 excellent strength and impact resistance.
- Worm gear material is available in two option.
  - Ductile iron,Class 80-55-06
  - Aluminum bronze, B148-C95800
- Worm is 1045 heat treated Carbon steel.
- Removable splined bushing to permit accurate positioning between gear drive and valve stem.
- Options include hand wheels, chain and etc.

### Bushing Type

Splines permit accurate alignment of valve stem key.

### M·O·V OPTION

Worm Gear can be provided with Motor actuator input flanges to accept standard ISO Mounting Base.

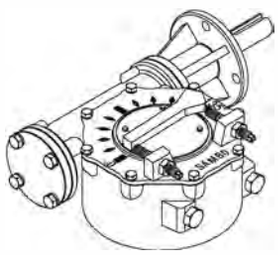

### LOCKING DEVICE OPTION

Input can be equipped with a Handwheel locking device for Manually operated units.

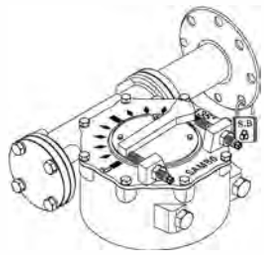

## Selection Chart for Manual Operation >>>

| SIZE / MODEL | GEAR RATIO | MAX. STEM ACCEPTANCE | BASE MOUNTING OPTION & STANDARD | MAX. TORQUE CAPACITY | | WEIGHT |
|---|---|---|---|---|---|---|
| | | | | N–m | Ft . lbf | Kg |
| * SBWG–BF 135 | 32 : 1 | 20 (6X6) | F–05, F–07 | 360 | 266 | 5 |
| SBWG–0 135 | 36 : 1 | 28 (8X7) | F–07 , F–10 | 780 | 575 | 8 |
| SBWG–00 135 | 40 : 1 | 36 (10X8) | F–10 , F–12 | 1200 | 885 | 13 |
| SBWG–01 135 | 44 : 1 | 46 (14X9) | F–10 , F–12 , F–14 | 2000 | 1475 | 16 |
| SBWG–02 135 | 48 : 1 | 60 (18X11) | F–12 , F–14 , F–16 | 2800 | 2065 | 24 |
| SBWG–03 135 | 52 : 1 | 75 (20X12) | F–14 , F–16 , (F–20) | 4300 | 3172 | 43 |
| SBWG–35 135 | 52 : 1 | 80 (22X14) | F–16 , (F–20) , F–25 | 6100 | 4499 | 37 |
| SBWG–04 135 | 56 : 1 | 95 (25X14) | F–16 , (F–20) , F–25 | 10400 | 7671 | 62 |
| * SBWG–05 135 | 60 : 1 | 115 (32X18) | (F–20), F–25 , F–30 | 15900 | 11727 | 84 |
| SBWG–55 135 | 62 : 1 | 125 (32X18) | F–25 , F–30 | 23500 | 17333 | 105 |
| SBWG–06 135 | 64 : 1 | 140 (36X20) | F–25 , F–30 , F–35 | 32800 | 24192 | 157 |
| SBWG–07 135 | 68 : 1 | 180 (45X25) | F–30 , F–35 , F–40 | 51100 | 37689 | 255 |
| SBWG–75 135 | 66 : 1 | 210 (50X28) | F–35 , F–40 , F–48 | 81500 | 60111 | 364 |
| SBWG–08 135 | 66 : 1 | 250 (56X32) | F–40 , F–48 | 121000 | 89245 | 489 |
| SBWG–09 135 | 66 : 1 | 280 (63X32) | F–48 , F–60 | 192500 | 141981 | 847 |
| SBWG–10 135 | 64 : 1 | 320 (70X36) | F–60 | 275000 | 202830 | 1347 |
| SBWG–11 135 | 68 : 1 | 360 (80X40) | F–60 | 442000 | 326002 | 2105 |
| * SBWG–12 135 | 70 : 1 | 400 (90X45) | F–60 , (F–80) | 610000 | 449913 | 2923 |
| * SBWG–13 135 | 72 : 1 | 420 (100X50) | F–60 , (F–80) | 970000 | 715435 | 3825 |

Size and component specification in this catalogue are subject to change without prior notice for quality improvement.
* Mark has been changed and updated.

# PART TURN 135°

## Horizontal Input with Single Reduction Gear Attachment

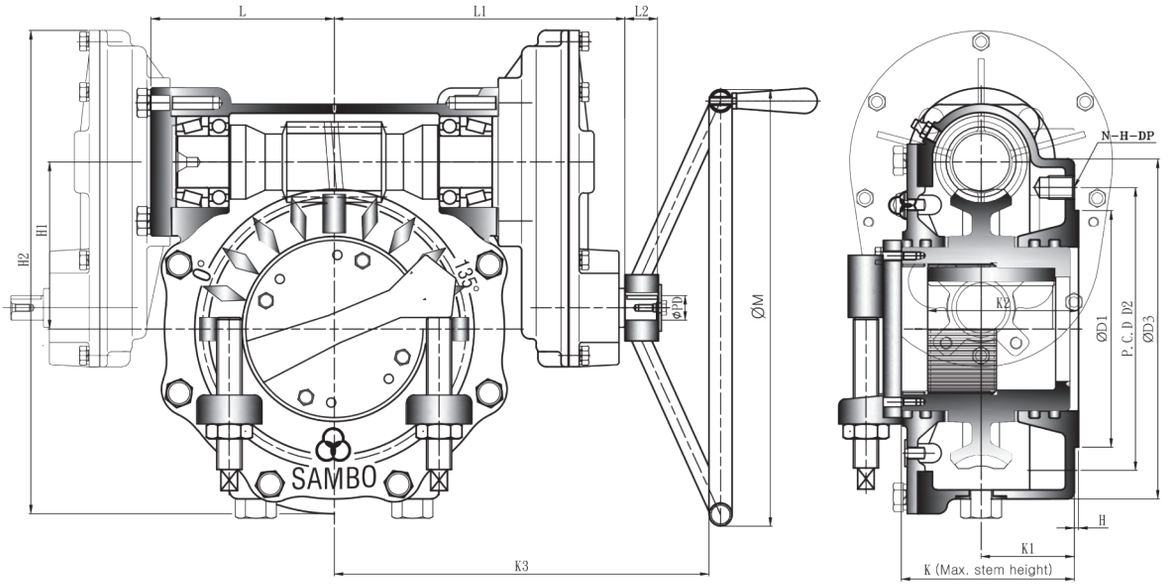


• Pin hole size is same as tap out diameter

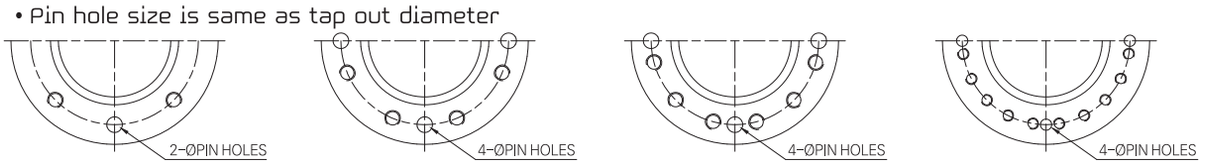


TYPE - A TYPE - B TYPE - C TYPE - D

## Dimension >>>

UNIT : mm

| MODEL \ DIM | BASE PART | | | | | | | EXTERNAL PART | | | | | | | | INPUT SHAFT PART | | | HAND WHEEL |
|---|---|---|---|---|---|---|---|---|---|---|---|---|---|---|---|---|---|---|---|
| | TYPE | FLANGE | ØD1 | P.C.D ØD2 | P.C.D N-H-DP | ØD3 | H | H1 | H2 | K | K1 | K2 | K3 | L | L1 | L2 | ØPD | KEY | |
| SBWG-00-1S 135 | A | F-12 | 85 | 125 | 4-M12-18 | 165 | 2 | 69.5 | 210 | 86.5 | 43 | 53.6 | 259 | 86 | 166 | 29 | 21 | 6X6 | 300 |
| SBWG-01-1S 135 | | F-14 | 100 | 140 | 4-M16-24 | 190 | | 82.5 | 235.5 | 96 | 53 | 65 | 288 | 95 | 175 | | | | 400 |
| SBWG-02-1S 135 | | F-16 | 130 | 165 | 4-M20-30 | 220 | | 97 | 282 | 111.5 | 58 | 75.5 | 329 | 108 | 190.5 | 34 | 26 | 8X7 | 500 |
| SBWG-03-1S 135 | B | F-16 (F-20) | 160 | 205 | 8-M16-24 | 250 | 3 | 112 | 312 | 118 | 61 | 87 | 349 | 118 | 200.5 | 34 | 26 | 8X7 | 560 |
| SBWG-35-1S 135 | | F-25 | 200 | 254 | 8-M16-24 | 300 | | 127 | 352 | 135 | 72 | 100 | 367 | 125 | 218.5 | | | | |
| SBWG-04-1S 135 | | F-25 | 200 | 254 | 8-M16-24 | 300 | | 153 | 417.5 | 147 | 73 | 120 | 413 | 153 | 250 | 34 | 32 | 10X8 | 630 |
| * SBWG-05-1S 135 | | F-30 | 230 | 298 | 8-M20-30 | 350 | | 180 | 469.5 | 155 | 78 | 141 | 443 | 163 | 260 | | | | 710 |
| SBWG-55-1S 135 | | | | | | 350 | | 202 | 516.5 | 162 | 80 | 144 | 463 | 183 | 280 | | | | |
| SBWG-06-1S 135 | | F-35 | 260 | 356 | 8-M30-45 | 415 | | 230 | 621 | 200 | 109 | 173 | 552 | 217 | 349 | 44 | 38 | 12X8 | 800 |
| SBWG-07-1S 135 | | F-40 | 300 | 406 | 8-M36-55 | 475 | | 280.5 | 723 | 227 | 116 | 209 | 607 | 252 | 384 | | | | 900 |
| SBWG-75-1S 135 | C | F-48 | 370 | 483 | 12-M36-55 | 560 | 5 | 326 | 860 | 246 | 120 | 220 | 721 | 279 | 485 | 58 | 50 | 16X10 | 1000 |
| SBWG-08-1S 135 | | | | | | 560 | | 379 | 968 | 254 | 125 | 245 | 756 | 314 | 520 | | | | |
| SBWG-09-1S 135 | D | F-60 | 470 | 603 | 20-M36-55 | 700 | 5 | 448.5 | 1107.5 | 284 | 138 | 270 | 796 | 354 | 560 | 58 | 50 | 16X10 | 1000 |
| SBWG-10-1S 135 | | | | | | 800 | | 513 | 1291 | 352 | 164 | 330 | 927 | 426 | 691 | | | | |
| SBWG-11-1S 135 | | | | | | 900 | | 616.5 | 1499.5 | 394 | 181 | 370 | 969.5 | 468.5 | 733.5 | | | | |
| * SBWG-12-1S 135 | | F-80 | 670 | 813 | 20-M42-63 | 1000 | | 711 | 1751 | 482 | 265 | 415 | 1140 | 554 | 905 | | | | |
| * SBWG-13-1S 135 | | | | | | 1000 | | 809 | 1944 | 546 | 301 | 515 | 1190 | 609 | 955 | | | | |

Size and component specification in this catalogue are subject to change without prior notice for quality improvement.
* Mark has been changed and updated.

## Feature >>>

- All mounting bases conform to ISO 5210/1 standards.
- All castings are ductile iron, Class 65-45-12 excellent strength and impact resistance.
- Worm gear material is available in two option.
  - Ductile iron,Class 80-55-06
  - Aluminum bronze, B148-C95800
- Worm is 1045 heat treated Carbon steel.
- Removable splined bushing to permit accurate positioning between gear drive and valve stem.
- Options include hand wheels, chain and etc.

### Bushing Type

Splines permit accurate alignment of valve stem key.

### M·O·V OPTION

Worm Gear can be provided with Motor actuator input flanges to accept standard ISO Mounting Base.

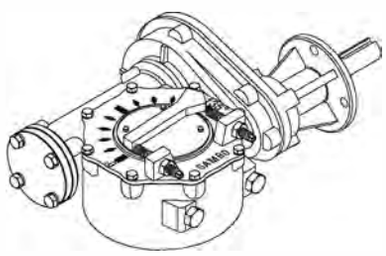

### LOCKING DEVICE OPTION

Input can be equipped with a Handwheel locking device for Manually operated units.

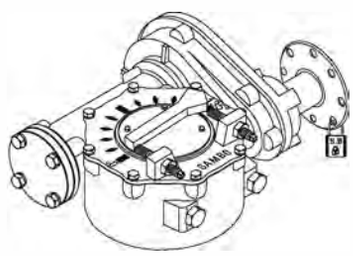

## Selection Chart for Manual Operation >>>

| SIZE / MODEL | GEAR RATIO | MAX. STEM ACCEPTANCE | BASE MOUNTING OPTION & STANDARD | MAX. TORQUE CAPACITY | | WEIGHT |
|---|---|---|---|---|---|---|
| | | | | N-m | Ft . lbf | Kg |
| SBWG-00-1S 135 | 80 : 1 | 36 (10X8) | F-10 , F-12 | 1200 | 885 | 15 |
| SBWG-01-1S 135 | 88 : 1 | 46 (14X9) | F-10 , F-12 , F-14 | 2000 | 1475 | 18 |
| SBWG-02-1S 135 | 121,6 : 1 | 60 (18X11) | F-12 , F-14 , F-16 | 2800 | 2065 | 27 |
| SBWG-03-1S 135 | 131,7 : 1 | 75 (20X12) | F-14 , F-16 , (F-20) | 4300 | 3172 | 37 |
| SBWG-35-1S 135 | 131,7 : 1 | 80 (22X14) | F-16 , (F-20), F-25 | 6100 | 4499 | 51 |
| SBWG-04-1S 135 | 168 : 1 | 95 (25X14) | F-16 , (F-20) , F-25 | 10400 | 7671 | 71 |
| * SBWG-05-1S 135 | 180 : 1 | 115 (32X18) | (F-20), F-25 , F-30 | 15900 | 11727 | 94 |
| SBWG-55-1S 135 | 186 : 1 | 125 (32X18) | F-25 , F-30 | 23500 | 17333 | 115 |
| SBWG-06-1S 135 | 256 : 1 | 140 (36X20) | F-25 , F-30 , F-35 | 32800 | 24192 | 185 |
| SBWG-07-1S 135 | 272 : 1 | 180 (45X25) | F-30 , F-35 , F-40 | 51100 | 37689 | 282 |
| SBWG-75-1S 135 | 330 : 1 | 210 (50X28) | F-35 , F-40 , F-48 | 81500 | 60111 | 436 |
| SBWG-08-1S 135 | 330 : 1 | 250 (56X32) | F-40 , F-48 | 121000 | 89245 | 561 |
| SBWG-09-1S 135 | 330 : 1 | 280 (63X32) | F-48 , F-60 | 192500 | 141981 | 920 |
| SBWG-10-1S 135 | 320 : 1 | 320 (70X36) | F-60 | 275000 | 202830 | 1444 |
| SBWG-11-1S 135 | 340 : 1 | 360 (80X40) | F-60 | 442000 | 326002 | 2202 |
| * SBWG-12-1S 135 | 350 : 1 | 400 (90X45) | F-60 , (F-80) | 610000 | 449913 | 3103 |
| * SBWG-13-1S 135 | 360 : 1 | 420 (100X50) | F-60 , (F-80) | 970000 | 715435 | 4005 |

Size and component specification in this catalogue are subject to change without prior notice for quality improvement.
* Mark has been changed and updated.

# PART TURN 135°

## Horizontal Input with Double Reduction Gear Attachment

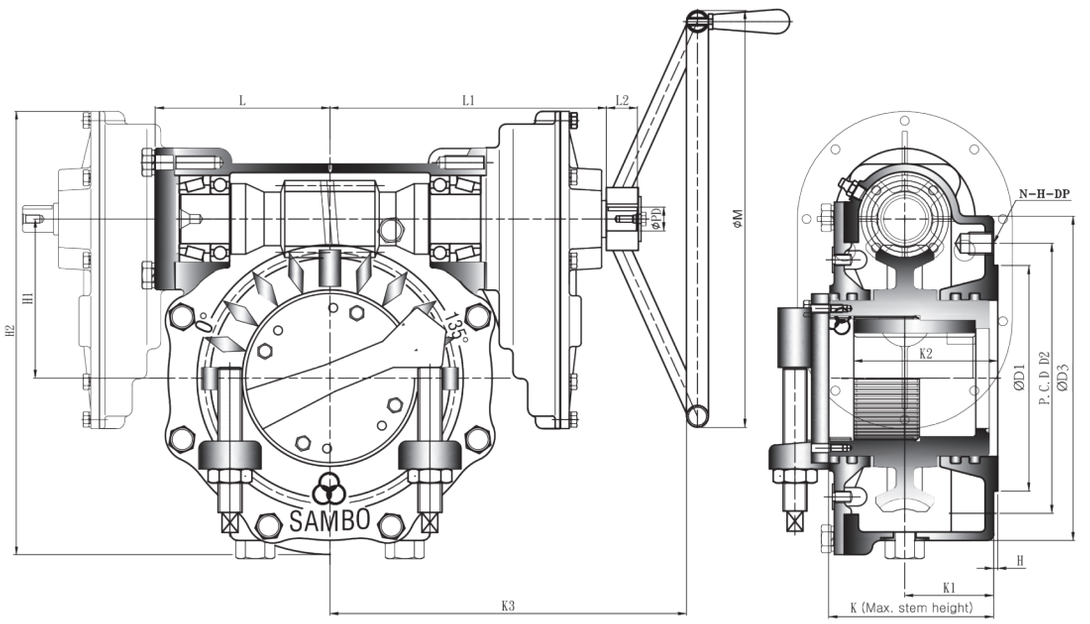


• Pin hole size is same as tap out diameter

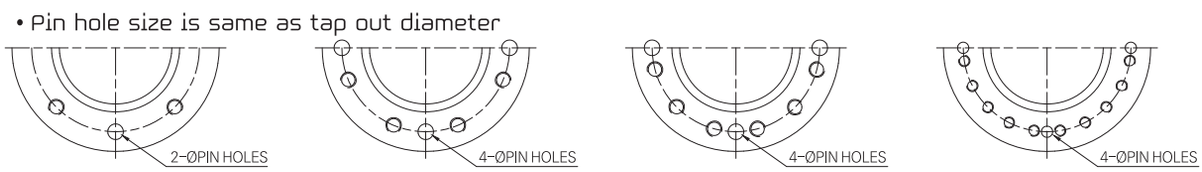


TYPE - A TYPE - B TYPE - C TYPE - D

## Dimension >>>

UNIT : mm

| MODEL \ DIM | BASE PART | | | | | | | EXTERNAL PART | | | | | | | | INPUT SHAFT PART | | | HAND WHEEL |
|---|---|---|---|---|---|---|---|---|---|---|---|---|---|---|---|---|---|---|---|
| | TYPE | FLANGE | ØD1 | P.C.D ØD2 | P.C.D N-H-DP | ØD3 | H | H1 | H2 | K | K1 | K2 | K3 | L | L1 | L2 | ØPD | KEY | |
| SBWG-00-1SD 135 | A | F-12 | 85 | 125 | 4-M12-18 | 165 | 2 | 69.5 | 210 | 86.5 | 43 | 53.6 | 276 | 86 | 183 | 29 | 21 | 6X6 | 300 |
| SBWG-01-1SD 135 | | F-14 | 100 | 140 | 4-M16-24 | 190 | | 82.5 | 235.5 | 96 | 53 | 65 | 305 | 95 | 192 | | | | 400 |
| SBWG-02-1SD 135 | | F-16 | 130 | 165 | 4-M20-30 | 220 | | 97 | 282 | 111.5 | 58 | 75.5 | 343 | 108 | 214.5 | 34 | 26 | 8X7 | 500 |
| SBWG-03-1SD 135 | B | F-16 (F-20) | 160 | 205 | 8-M16-24 | 250 | 3 | 112 | 312 | 118 | 61 | 87 | 373 | 118 | 224.5 | 34 | 26 | 8X7 | 560 |
| SBWG-35-1SD 135 | | F-25 | 200 | 254 | 8-M16-24 | 300 | | 127 | 352 | 135 | 72 | 100 | 385 | 125 | 236.5 | | | | |
| SBWG-04-1SD 135 | | F-25 | 200 | 254 | 8-M16-24 | 300 | | 153 | 417.5 | 147 | 73 | 120 | 449 | 153 | 286 | 34 | 32 | 10X8 | 630 |
| * SBWG-05-1SD 135 | | F-30 | 230 | 298 | 8-M20-30 | 350 | | 180 | 469.5 | 155 | 78 | 141 | 479 | 163 | 296 | | | | 710 |
| SBWG-55-1SD 135 | | | | | | 350 | | 202 | 516.5 | 162 | 80 | 144 | 499 | 183 | 316 | | | | |
| SBWG-06-1SD 135 | | F-35 | 260 | 356 | 8-M30-45 | 415 | | 230 | 621 | 200 | 109 | 173 | 579 | 217 | 376 | 44 | 38 | 12X8 | 800 |
| SBWG-07-1SD 135 | | F-40 | 300 | 406 | 8-M36-55 | 475 | | 280.5 | 723 | 227 | 116 | 209 | 634 | 252 | 411 | | | | 900 |
| SBWG-75-1SD 135 | C | F-48 | 370 | 483 | 12-M36-55 | 560 | 5 | 326 | 860 | 246 | 120 | 220 | 767 | 279 | 531 | 58 | 50 | 16X10 | 1000 |
| SBWG-08-1SD 135 | | | | | | 560 | | 379 | 968 | 254 | 125 | 245 | 802 | 314 | 566 | | | | |
| SBWG-09-1SD 135 | D | F-60 | 470 | 603 | 20-M36-55 | 700 | 5 | 448.5 | 1107.5 | 284 | 138 | 270 | 842 | 354 | 606 | 58 | 50 | 16X10 | 1000 |
| SBWG-10-1SD 135 | | | | | | 800 | | 513 | 1291 | 352 | 164 | 330 | 982 | 426 | 746 | | | | |
| SBWG-11-1SD 135 | | | | | | 900 | | 616.5 | 1499.5 | 394 | 181 | 370 | 1039.5 | 468.5 | 788.5 | | | | |
| * SBWG-12-1SD 135 | | F-80 | 670 | 813 | 20-M42-63 | 1000 | | 711 | 1751 | 482 | 265 | 415 | 1205 | 554 | 969 | | | | |
| * SBWG-13-1SD 135 | | | | | | 1000 | | 809 | 1944 | 546 | 301 | 515 | 1245 | 609 | 1009 | | | | |

Size and component specification in this catalogue are subject to change without prior notice for quality improvement.
* Mark has been changed and updated.

## Feature >>>

- All mounting bases conform to ISO 5210/1 standards.
- All castings are ductile iron, Class 65-45-12 excellent strength and impact resistance.
- Worm gear material is available in two option.
  - Ductile iron,Class 80-55-06
  - Aluminum bronze, B148-C95800
- Worm is 1045 heat treated Carbon steel.
- Removable splined bushing to permit accurate positioning between gear drive and valve stem.
- Options include hand wheels, chain and etc.

Global Leader SAMBO SPIRAL BEVEL GEAR ACTUATORS

The World's Highest Quality!

### Bushing Type

Splines permit accurate alignment of valve stem key.

### M·O·V OPTION

Worm Gear can be provided with Motor actuator input flanges to accept standard ISO Mounting Base.

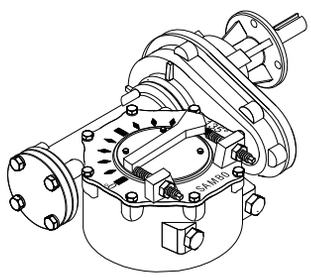

### LOCKING DEVICE OPTION

Input can be equipped with a Handwheel locking device for Manually operated units.

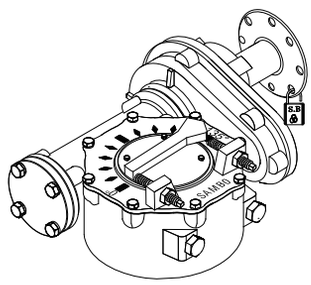

## Selection Chart for Manual Operation >>>

| SIZE / MODEL | MAX. GEAR RATIO (Changeable) | MAX. STEM ACCEPTANCE | BASE MOUNTING OPTION & STANDARD | MAX. TORQUE CAPACITY | | WEIGHT |
|---|---|---|---|---|---|---|
| | | | | N–m | Ft . lbf | Kg |
| SBWG–00–1SD 135 | 160 : 1 | 36 (10X8) | F–10 , F–12 | 1200 | 885 | 17 |
| SBWG–01–1SD 135 | 176 : 1 | 46 (14X9) | F–10 , F–12 , F–14 | 2000 | 1475 | 20 |
| SBWG–02–1SD 135 | 308 : 1 | 60 (18X11) | F–12 , F–14 , F–16 | 2800 | 2065 | 30 |
| SBWG–03–1SD 135 | 333.7 : 1 | 75 (20X12) | F–14 , F–16 , (F–20) | 4300 | 3172 | 39 |
| SBWG–35–1SD 135 | 333.7 : 1 | 80 (22X14) | F–16 , (F–20) , F–25 | 6100 | 4499 | 53 |
| SBWG–04–1SD 135 | 504 : 1 | 95 (25X14) | F–16 , (F–20) , F–25 | 10400 | 7671 | 76 |
| * SBWG–05–1SD 135 | 540 : 1 | 115 (32X18) | (F–20), F–25 , F–30 | 15900 | 11727 | 99 |
| SBWG–55–1SD 135 | 558 : 1 | 125 (32X18) | F–25 , F–30 | 23500 | 17333 | 120 |
| SBWG–06–1SD 135 | 1024 : 1 | 140 (36X20) | F–25 , F–30 , F–35 | 32800 | 24192 | 198 |
| SBWG–07–1SD 135 | 1088 : 1 | 180 (45X25) | F–30 , F–35 , F–40 | 51100 | 37689 | 296 |
| SBWG–75–1SD 135 | 1650 : 1 | 210 (50X28) | F–35 , F–40 , F–48 | 81500 | 60111 | 464 |
| SBWG–08–1SD 135 | 1650 : 1 | 250 (56X32) | F–40 , F–48 | 121000 | 89245 | 589 |
| SBWG–09–1SD 135 | 1650 : 1 | 280 (63X32) | F–48 , F–60 | 192500 | 141981 | 947 |
| SBWG–10–1SD 135 | 1600 : 1 | 320 (70X36) | F–60 | 275000 | 202830 | 1482 |
| SBWG–11–1SD 135 | 1700 : 1 | 360 (80X40) | F–60 | 442000 | 326002 | 2240 |
| * SBWG–12–1SD 135 | 1750 : 1 | 400 (90X45) | F–60 , (F–80) | 610000 | 449913 | 3103 |
| * SBWG–13–1SD 135 | 1800 : 1 | 420 (100X50) | F–60 , (F–80) | 970000 | 715435 | 4005 |

Size and component specification in this catalogue are subject to change without prior notice for quality improvement.
* Mark has been changed and updated.

# PART TURN 180°

## Horizontal Input

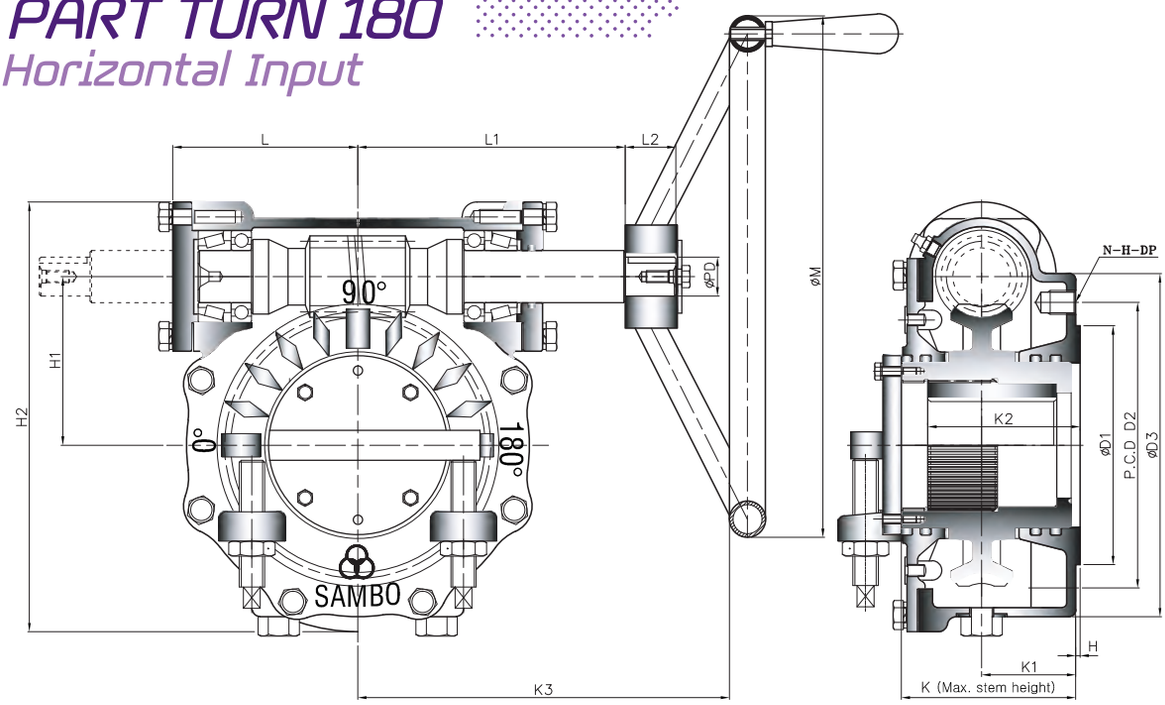


• Pin hole size is same as tap out diameter

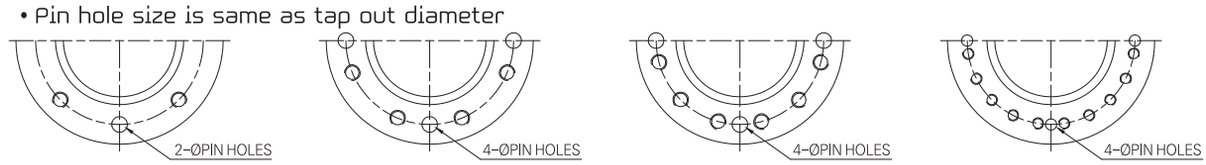


TYPE - A TYPE - B TYPE - C TYPE - D

## Dimension >>>

UNIT : mm

| MODEL \ DIM | BASE PART | | | | | | | EXTERNAL PART | | | | | | | | INPUT SHAFT PART | | | HAND WHEEL |
|---|---|---|---|---|---|---|---|---|---|---|---|---|---|---|---|---|---|---|---|
| | TYPE | FLANGE | ØD1 | P.C.D ØD2 | P.C.D N-H-DP | ØD3 | H | H1 | H2 | K | K1 | K2 | K3 | L | L1 | L2 | ØPD | KEY | |
| * SBWG-BF 180 | A | F-07 | 55 | 70 | 4-M8-12 | 110 | 2 | 42 | 132 | 76 | 38 | 38.6 | 150 | 64 | 97 | 24 | 16 | 6X6 | 200 |
| SBWG-0 180 | | F-10 | 70 | 102 | 4-M10-15 | 135 | | 57 | 159.5 | 77 | 38 | 43.6 | 177 | 71.5 | 104.5 | | | | 250 |
| SBWG-00 180 | | F-12 | 85 | 125 | 4-M12-18 | 165 | | 69.5 | 192 | 86.5 | 43 | 53.6 | 230 | 86 | 138 | 29 | 21 | 6X6 | 300 |
| SBWG-01 180 | | F-14 | 100 | 140 | 4-M16-24 | 190 | | 82.5 | 217.5 | 96 | 53 | 65 | 260 | 95 | 147 | | | | 400 |
| SBWG-02 180 | | F-16 | 130 | 165 | 4-M20-30 | 220 | | 97 | 257 | 111.5 | 58 | 75.5 | 294 | 108 | 166 | 34 | 26 | 8X7 | 500 |
| SBWG-03 180 | B | F-16 (F-20) | 160 | 205 | 8-M16-24 | 250 | 3 | 112 | 287 | 118 | 61 | 87 | 324 | 118 | 176 | 34 | 26 | 8X7 | 560 |
| SBWG-35 180 | | F-25 | 200 | 254 | 8-M16-24 | 300 | | 127 | 327 | 135 | 72 | 100 | 342 | 136 | 194 | | | | |
| SBWG-04 180 | | F-25 | 200 | 254 | 8-M16-24 | 300 | | 153 | 385.5 | 147 | 73 | 120 | 370 | 153 | 207 | 34 | 32 | 10X8 | 630 |
| * SBWG-05 180 | | F-30 | 230 | 298 | 8-M20-30 | 350 | | 180 | 437.5 | 155 | 78 | 141 | 400 | 163 | 217 | | | | 710 |
| SBWG-55 180 | | | | | | 350 | | 202 | 484.5 | 162 | 80 | 144 | 420 | 183 | 237 | | | | |
| SBWG-06 180 | | F-35 | 260 | 356 | 8-M30-45 | 415 | | 230 | 558.5 | 200 | 109 | 173 | 489 | 217 | 286 | 44 | 38 | 12X8 | 800 |
| SBWG-07 180 | | F-40 | 300 | 406 | 8-M36-55 | 475 | | 280.5 | 660.5 | 227 | 116 | 209 | 538 | 252 | 320 | | | | 900 |
| SBWG-75 180 | C | F-48 | 370 | 483 | 12-M36-55 | 560 | 5 | 326 | 776 | 246 | 120 | 220 | 617 | 279 | 381 | 58 | 50 | 16X10 | 1000 |
| SBWG-08 180 | | | | | | 560 | | 379 | 884 | 254 | 125 | 245 | 652 | 314 | 416 | | | | |
| SBWG-09 180 | D | F-60 | 470 | 603 | 20-M36-55 | 700 | 5 | 448.5 | 1023.5 | 284 | 138 | 270 | 692 | 354 | 456 | 58 | 50 | 16X10 | 1000 |
| SBWG-10 180 | | | | | | 800 | | 513 | 1191 | 352 | 164 | 330 | 814 | 426 | 614 | | | | |
| SBWG-11 180 | | | | | | 900 | | 616.5 | 1399.5 | 394 | 181 | 370 | 857 | 468.5 | 657 | | | | |
| * SBWG-12 180 | | F-80 | 670 | 813 | 20-M42-63 | 1000 | | 711 | 1621 | 482 | 265 | 415 | 980 | 554 | 702 | | | | |
| * SBWG-13 180 | | | | | | 1000 | | 809 | 1814 | 546 | 301 | 515 | 988 | 609 | 752 | | | | |

Size and component specification in this catalogue are subject to change without prior notice for quality improvement.
* Mark has been changed and updated.

## Feature >>>

- All mounting bases conform to ISO 5210/1 standards.
- All castings are ductile iron, Class 65-45-12 excellent strength and impact resistance.
- Worm gear material is available in two option.
  - Ductile iron,Class 80-55-06
  - Aluminum bronze, B148-C95800
- Worm is 1045 heat treated Carbon steel.
- Removable splined bushing to permit accurate positioning between gear drive and valve stem.
- Options include hand wheels, chain and etc.

Global Leader SAMBO SPIRAL BEVEL GEAR ACTUATORS

The World's Highest Quality!

### Bushing Type

Splines permit accurate alignment of valve stem key.

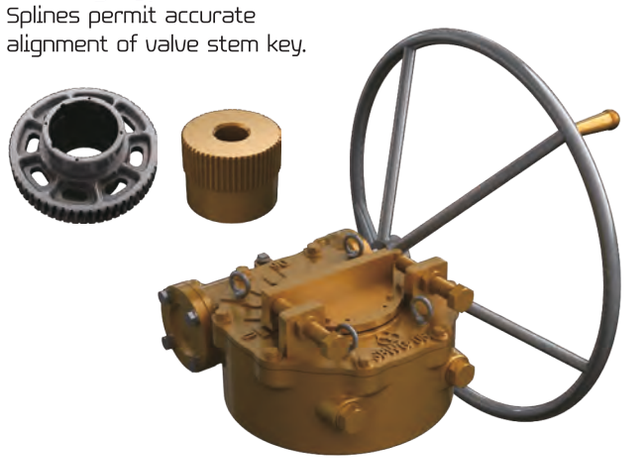

### M·O·V OPTION

Worm Gear can be provided with Motor actuator input flanges to accept standard ISO Mounting Base.

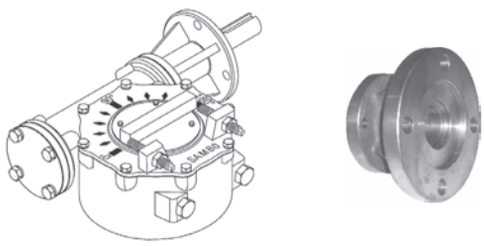

### LOCKING DEVICE OPTION

Input can be equipped with a Handwheel locking device for Manually operated units.

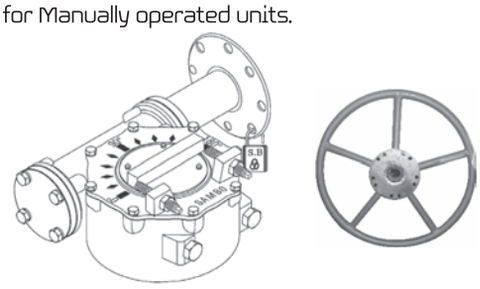

## Selection Chart for Manual Operation >>>

| SIZE / MODEL | GEAR RATIO | MAX. STEM ACCEPTANCE | BASE MOUNTING OPTION & STANDARD | MAX. TORQUE CAPACITY | | WEIGHT |
|---|---|---|---|---|---|---|
| | | | | N–m | Ft . lbf | Kg |
| * SBWG–BF 180 | 32 : 1 | 20 (6X6) | F–05, F–07 | 360 | 266 | 5 |
| SBWG–0 180 | 36 : 1 | 28 (8X7) | F–07 , F–10 | 780 | 575 | 8 |
| SBWG–00 180 | 40 : 1 | 36 (10X8) | F–10 , F–12 | 1200 | 885 | 13 |
| SBWG–01 180 | 44 : 1 | 46 (14X9) | F–10 , F–12 , F–14 | 2000 | 1475 | 16 |
| SBWG–02 180 | 48 : 1 | 60 (18X11) | F–12 , F–14 , F–16 | 2800 | 2065 | 24 |
| SBWG–03 180 | 52 : 1 | 75 (20X12) | F–14 , F–16 , (F–20) | 4300 | 3172 | 43 |
| SBWG–35 180 | 52 : 1 | 80 (22X14) | F–16 , (F–20) , F–25 | 6100 | 4499 | 37 |
| SBWG–04 180 | 56 : 1 | 95 (25X14) | F–16 , (F–20) , F–25 | 10400 | 7671 | 62 |
| * SBWG–05 180 | 60 : 1 | 115 (32X18) | (F–20), F–25 , F–30 | 15900 | 11727 | 84 |
| SBWG–55 180 | 62 : 1 | 125 (32X18) | F–25 , F–30 | 23500 | 17333 | 105 |
| SBWG–06 180 | 64 : 1 | 140 (36X20) | F–25 , F–30 , F–35 | 32800 | 24192 | 157 |
| SBWG–07 180 | 68 : 1 | 180 (45X25) | F–30 , F–35 , F–40 | 51100 | 37689 | 255 |
| SBWG–75 180 | 66 : 1 | 210 (50X28) | F–35 , F–40 , F–48 | 81500 | 60111 | 364 |
| SBWG–08 180 | 66 : 1 | 250 (56X32) | F–40 , F–48 | 121000 | 89245 | 489 |
| SBWG–09 180 | 66 : 1 | 280 (63X32) | F–48 , F–60 | 192500 | 141981 | 847 |
| SBWG–10 180 | 64 : 1 | 320 (70X36) | F–60 | 275000 | 202830 | 1347 |
| SBWG–11 180 | 68 : 1 | 360 (80X40) | F–60 | 442000 | 326002 | 2105 |
| * SBWG–12 180 | 70 : 1 | 400 (90X45) | F–60 , (F–80) | 610000 | 449913 | 2923 |
| * SBWG–13 180 | 72 : 1 | 420 (100X50) | F–60 , (F–80) | 970000 | 715435 | 3825 |

Size and component specification in this catalogue are subject to change without prior notice for quality improvement.
* Mark has been changed and updated.

# PART TURN 180°

## Horizontal Input with Single Reduction Gear Attachment

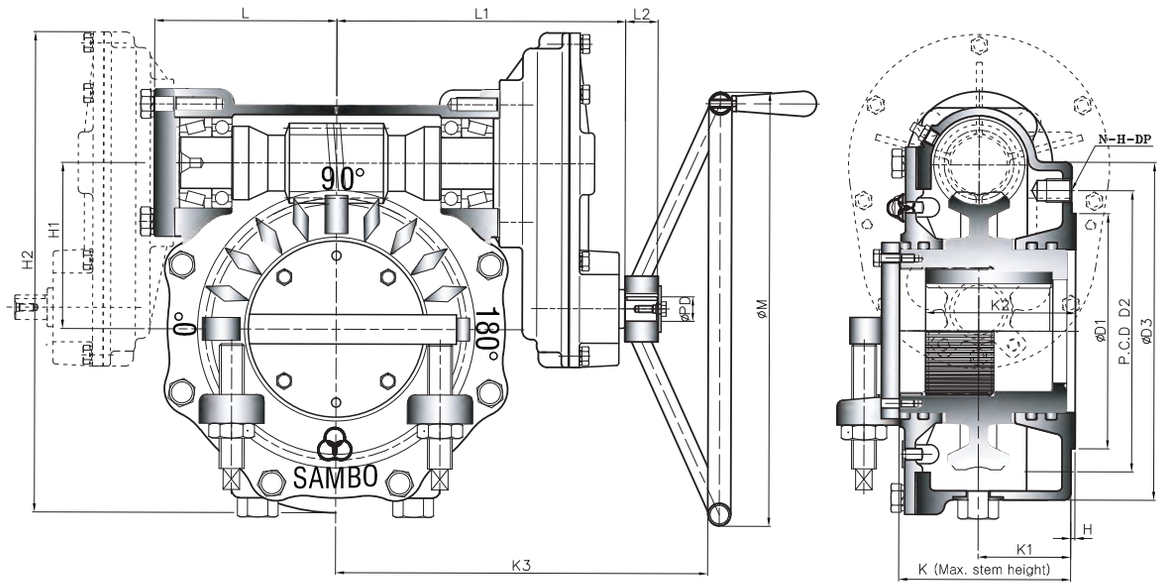


• Pin hole size is same as tap out diameter

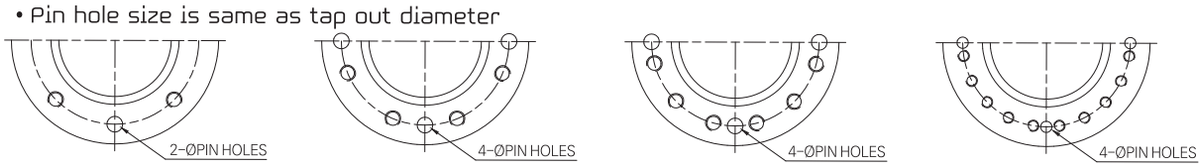


TYPE - A TYPE - B TYPE - C TYPE - D

## Dimension >>>

UNIT : mm

| MODEL \ DIM | BASE PART | | | | | | | EXTERNAL PART | | | | | | | | INPUT SHAFT PART | | | HAND WHEEL |
|---|---|---|---|---|---|---|---|---|---|---|---|---|---|---|---|---|---|---|---|
| | TYPE | FLANGE | ØD1 | P.C.D ØD2 | P.C.D N-H-DP | ØD3 | H | H1 | H2 | K | K1 | K2 | K3 | L | L1 | L2 | ØPD | KEY | |
| SBWG-00-1S 180 | A | F-12 | 85 | 125 | 4-M12-18 | 165 | 2 | 69.5 | 210 | 86.5 | 43 | 53.6 | 259 | 86 | 166 | 29 | 21 | 6X6 | 300 |
| SBWG-01-1S 180 | | F-14 | 100 | 140 | 4-M16-24 | 190 | | 82.5 | 235.5 | 96 | 53 | 65 | 288 | 95 | 175 | | | | 400 |
| SBWG-02-1S 180 | | F-16 | 130 | 165 | 4-M20-30 | 220 | | 97 | 282 | 111.5 | 58 | 75.5 | 329 | 108 | 190.5 | 34 | 26 | 8X7 | 500 |
| SBWG-03-1S 180 | B | F-16 (F-20) | 160 | 205 | 8-M16-24 | 250 | 3 | 112 | 312 | 118 | 61 | 87 | 349 | 118 | 200.5 | 34 | 26 | 8X7 | 560 |
| SBWG-35-1S 180 | | F-25 | 200 | 254 | 8-M16-24 | 300 | | 127 | 352 | 135 | 72 | 100 | 367 | 125 | 218.5 | | | | |
| SBWG-04-1S 180 | | F-25 | 200 | 254 | 8-M16-24 | 300 | | 153 | 417.5 | 147 | 73 | 120 | 413 | 153 | 250 | 34 | 32 | 10X8 | 630 |
| * SBWG-05-1S 180 | | F-30 | 230 | 298 | 8-M20-30 | 350 | | 180 | 469.5 | 155 | 78 | 141 | 443 | 163 | 260 | | | | 710 |
| SBWG-55-1S 180 | | | | | | 350 | | 202 | 516.5 | 162 | 80 | 144 | 463 | 183 | 280 | | | | |
| SBWG-06-1S 180 | | F-35 | 260 | 356 | 8-M30-45 | 415 | | 230 | 621 | 200 | 109 | 173 | 552 | 217 | 349 | 44 | 38 | 12X8 | 800 |
| SBWG-07-1S 180 | | F-40 | 300 | 406 | 8-M36-55 | 475 | | 280.5 | 723 | 227 | 116 | 209 | 607 | 252 | 384 | | | | 900 |
| SBWG-75-1S 180 | C | F-48 | 370 | 483 | 12-M36-55 | 560 | 5 | 326 | 860 | 246 | 120 | 220 | 721 | 279 | 485 | 58 | 50 | 16X10 | 1000 |
| SBWG-08-1S 180 | | | | | | 560 | | 379 | 968 | 254 | 125 | 245 | 756 | 314 | 520 | | | | |
| SBWG-09-1S 180 | D | F-60 | 470 | 603 | 20-M36-55 | 700 | 5 | 448.5 | 1107.5 | 284 | 138 | 270 | 796 | 354 | 560 | 58 | 50 | 16X10 | 1000 |
| SBWG-10-1S 180 | | | | | | 800 | | 513 | 1291 | 352 | 164 | 330 | 927 | 426 | 691 | | | | |
| SBWG-11-1S 180 | | | | | | 900 | | 616.5 | 1499.5 | 394 | 181 | 370 | 969.5 | 468.5 | 733.5 | | | | |
| * SBWG-12-1S 180 | | F-80 | 670 | 813 | 20-M42-63 | 1000 | | 711 | 1751 | 482 | 265 | 415 | 1140 | 554 | 905 | | | | |
| * SBWG-13-1S 180 | | | | | | 1000 | | 809 | 1944 | 546 | 301 | 515 | 1190 | 609 | 955 | | | | |

Size and component specification in this catalogue are subject to change without prior notice for quality improvement.
* Mark has been changed and updated.

## Feature >>>

- All mounting bases conform to ISO 5210/1 standards.
- All castings are ductile iron, Class 65-45-12 excellent strength and impact resistance.
- Worm gear material is available in two option.
  - Ductile iron,Class 80-55-06
  - Aluminum bronze, B148-C95800
- Worm is 1045 heat treated Carbon steel.
- Removable splined bushing to permit accurate positioning between gear drive and valve stem.
- Options include hand wheels, chain and etc.

### Bushing Type

Splines permit accurate alignment of valve stem key.

### M·O·V OPTION

Worm Gear can be provided with Motor actuator input flanges to accept standard ISO Mounting Base.

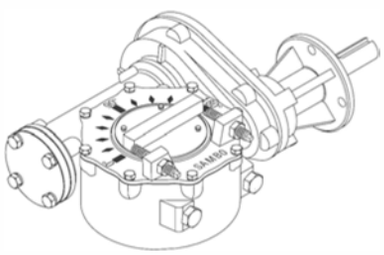

### LOCKING DEVICE OPTION

Input can be equipped with a Handwheel locking device for Manually operated units.

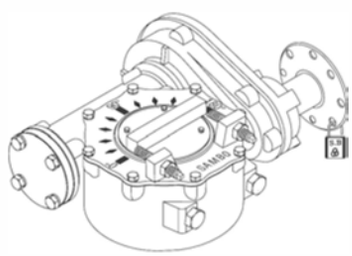

## Selection Chart for Manual Operation >>>

| SIZE / MODEL | GEAR RATIO | MAX. STEM ACCEPTANCE | BASE MOUNTING OPTION & STANDARD | MAX. TORQUE CAPACITY | | WEIGHT |
|---|---|---|---|---|---|---|
| | | | | N–m | Ft . lbf | Kg |
| SBWG–00–1S 180 | 80 : 1 | 36 (10X8) | F–10 , F–12 | 1200 | 885 | 15 |
| SBWG–01–1S 180 | 88 : 1 | 46 (14X9) | F–10 , F–12 , F–14 | 2000 | 1475 | 18 |
| SBWG–02–1S 180 | 121,6 : 1 | 60 (18X11) | F–12 , F–14 , F–16 | 2800 | 2065 | 27 |
| SBWG–03–1S 180 | 131,7 : 1 | 75 (20X12) | F–14 , F–16 , (F–20) | 4300 | 3172 | 37 |
| SBWG–35–1S 180 | 131,7 : 1 | 80 (22X14) | F–16 , (F–20), F–25 | 6100 | 4499 | 51 |
| SBWG–04–1S 180 | 168 : 1 | 95 (25X14) | F–16 , (F–20) , F–25 | 10400 | 7671 | 71 |
| * SBWG–05–1S 180 | 180 : 1 | 115 (32X18) | (F–20), F–25 , F–30 | 15900 | 11727 | 94 |
| SBWG–55–1S 180 | 186 : 1 | 125 (32X18) | F–25 , F–30 | 23500 | 17333 | 115 |
| SBWG–06–1S 180 | 256 : 1 | 140 (36X20) | F–25 , F–30 , F–35 | 32800 | 24192 | 185 |
| SBWG–07–1S 180 | 272 : 1 | 180 (45X25) | F–30 , F–35 , F–40 | 51100 | 37689 | 282 |
| SBWG–75–1S 180 | 330 : 1 | 210 (50X28) | F–35 , F–40 , F–48 | 81500 | 60111 | 436 |
| SBWG–08–1S 180 | 330 : 1 | 250 (56X32) | F–40 , F–48 | 121000 | 89245 | 561 |
| SBWG–09–1S 180 | 330 : 1 | 280 (63X32) | F–48 , F–60 | 192500 | 141981 | 920 |
| SBWG–10–1S 180 | 320 : 1 | 320 (70X36) | F–60 | 275000 | 202830 | 1444 |
| SBWG–11–1S 180 | 340 : 1 | 360 (80X40) | F–60 | 442000 | 326002 | 2202 |
| * SBWG–12–1S 180 | 350 : 1 | 400 (90X45) | F–60 , (F–80) | 610000 | 449913 | 3103 |
| * SBWG–13–1S 180 | 360 : 1 | 420 (100X50) | F–60 , (F–80) | 970000 | 715435 | 4005 |

Size and component specification in this catalogue are subject to change without prior notice for quality improvement.
* Mark has been changed and updated.

# PART TURN 180°

## Horizontal Input with Double Reduction Gear Attachment

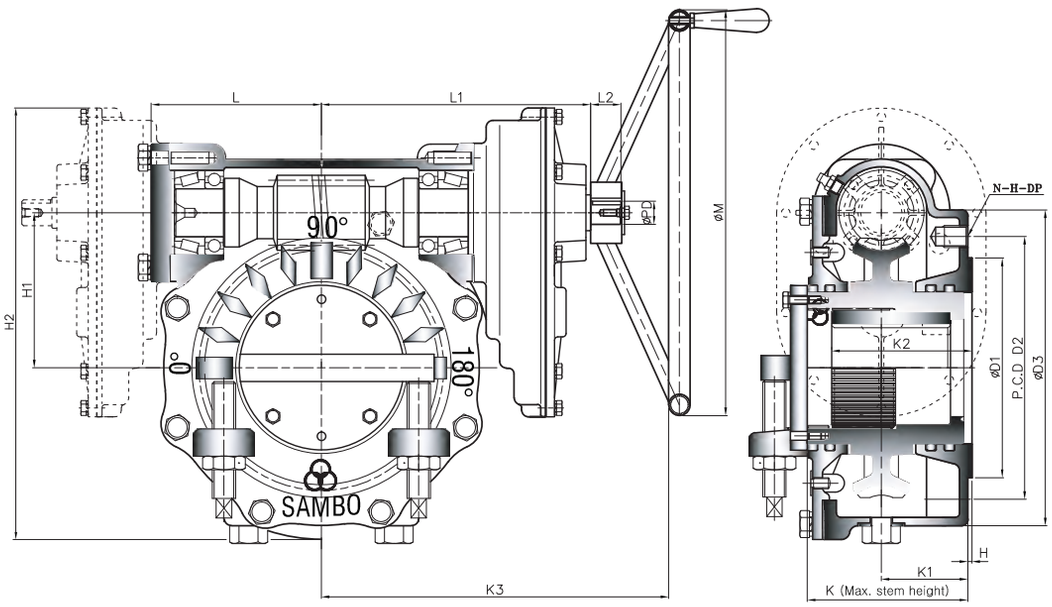


• Pin hole size is same as tap out diameter

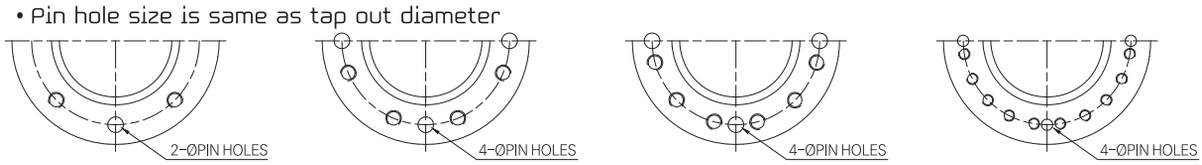


TYPE - A TYPE - B TYPE - C TYPE - D

## Dimension >>>

UNIT : mm

| MODEL \ DIM | BASE PART | | | | | | | EXTERNAL PART | | | | | | | | INPUT SHAFT PART | | | HAND WHEEL |
|---|---|---|---|---|---|---|---|---|---|---|---|---|---|---|---|---|---|---|---|
| | TYPE | FLANGE | ØD1 | P.C.D ØD2 | P.C.D N-H-DP | ØD3 | H | H1 | H2 | K | K1 | K2 | K3 | L | L1 | L2 | ØPD | KEY | |
| SBWG-00-1SD 180 | A | F-12 | 85 | 125 | 4-M12-18 | 165 | 2 | 69.5 | 210 | 86.5 | 43 | 53.6 | 276 | 86 | 183 | 29 | 21 | 6X6 | 300 |
| SBWG-01-1SD 180 | | F-14 | 100 | 140 | 4-M16-24 | 190 | | 82.5 | 235.5 | 96 | 53 | 65 | 305 | 95 | 192 | | | | 400 |
| SBWG-02-1SD 180 | | F-16 | 130 | 165 | 4-M20-30 | 220 | | 97 | 282 | 111.5 | 58 | 75.5 | 343 | 108 | 214.5 | 34 | 26 | 8X7 | 500 |
| SBWG-03-1SD 180 | B | F-16 (F-20) | 160 | 205 | 8-M16-24 | 250 | 3 | 112 | 312 | 118 | 61 | 87 | 373 | 118 | 224.5 | 34 | 26 | 8X7 | 560 |
| SBWG-35-1SD 180 | | F-25 | 200 | 254 | 8-M16-24 | 300 | | 127 | 352 | 135 | 72 | 100 | 385 | 125 | 236.5 | | | | |
| SBWG-04-1SD 180 | | F-25 | 200 | 254 | 8-M16-24 | 300 | | 153 | 417.5 | 147 | 73 | 120 | 449 | 153 | 286 | 34 | 32 | 10X8 | 630 |
| * SBWG-05-1SD 180 | | F-30 | 230 | 298 | 8-M20-30 | 350 | | 180 | 469.5 | 155 | 78 | 141 | 479 | 163 | 296 | | | | 710 |
| SBWG-55-1SD 180 | | | | | | 350 | | 202 | 516.5 | 162 | 80 | 144 | 499 | 183 | 316 | | | | |
| SBWG-06-1SD 180 | | F-35 | 260 | 356 | 8-M30-45 | 415 | | 230 | 621 | 200 | 109 | 173 | 579 | 217 | 376 | 44 | 38 | 12X8 | 800 |
| SBWG-07-1SD 180 | | F-40 | 300 | 406 | 8-M36-55 | 475 | | 280.5 | 723 | 227 | 116 | 209 | 634 | 252 | 411 | | | | 900 |
| SBWG-75-1SD 180 | C | F-48 | 370 | 483 | 12-M36-55 | 560 | 5 | 326 | 860 | 246 | 120 | 220 | 767 | 279 | 531 | 58 | 50 | 16X10 | 1000 |
| SBWG-08-1SD 180 | | | | | | 560 | | 379 | 968 | 254 | 125 | 245 | 802 | 314 | 566 | | | | |
| SBWG-09-1SD 180 | D | F-60 | 470 | 603 | 20-M36-55 | 700 | 5 | 448.5 | 1107.5 | 284 | 138 | 270 | 842 | 354 | 606 | 58 | 50 | 16X10 | 1000 |
| SBWG-10-1SD 180 | | | | | | 800 | | 513 | 1291 | 352 | 164 | 330 | 982 | 426 | 746 | | | | |
| SBWG-11-1SD 180 | | | | | | 900 | | 616.5 | 1499.5 | 394 | 181 | 370 | 1039.5 | 468.5 | 788.5 | | | | |
| * SBWG-12-1SD 180 | | F-80 | 670 | 813 | 20-M42-63 | 1000 | | 711 | 1751 | 482 | 265 | 415 | 1205 | 554 | 969 | | | | |
| * SBWG-13-1SD 180 | | | | | | 1000 | | 809 | 1944 | 546 | 301 | 515 | 1245 | 609 | 1009 | | | | |

Size and component specification in this catalogue are subject to change without prior notice for quality improvement.
* Mark has been changed and updated.

## Feature >>>

- All mounting bases conform to ISO 5210/1 standards.
- All castings are ductile iron, Class 65-45-12 excellent strength and impact resistance.
- Worm gear material is available in two option.
  - Ductile iron,Class 80-55-06
  - Aluminum bronze, B148-C95800
- Worm is 1045 heat treated Carbon steel.
- Removable splined bushing to permit accurate positioning between gear drive and valve stem.
- Options include hand wheels, chain and etc.

### Bushing Type

Splines permit accurate alignment of valve stem key.

### M·O·V OPTION

Worm Gear can be provided with Motor actuator input flanges to accept standard ISO Mounting Base.

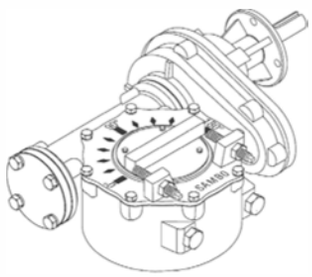

### LOCKING DEVICE OPTION

Input can be equipped with a Handwheel locking device for Manually operated units.

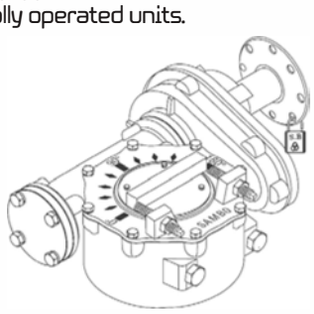

## Selection Chart for Manual Operation >>>

| SIZE / MODEL | MAX. GEAR RATIO (Changeable) | MAX. STEM ACCEPTANCE | BASE MOUNTING OPTION & STANDARD | MAX. TORQUE CAPACITY | | WEIGHT |
|---|---|---|---|---|---|---|
| | | | | N-m | Ft . lbf | Kg |
| SBWG-00-1SD 180 | 160 : 1 | 36 (10X8) | F-10 , F-12 | 1200 | 885 | 17 |
| SBWG-01-1SD 180 | 176 : 1 | 46 (14X9) | F-10 , F-12 , F-14 | 2000 | 1475 | 20 |
| SBWG-02-1SD 180 | 308 : 1 | 60 (18X11) | F-12 , F-14 , F-16 | 2800 | 2065 | 30 |
| SBWG-03-1SD 180 | 333,7 : 1 | 75 (20X12) | F-14 , F-16 , (F-20) | 4300 | 3172 | 39 |
| SBWG-35-1SD 180 | 333,7 : 1 | 80 (22X14) | F-16 , (F-20) , F-25 | 6100 | 4499 | 53 |
| SBWG-04-1SD 180 | 504 : 1 | 95 (25X14) | F-16 , (F-20) , F-25 | 10400 | 7671 | 76 |
| * SBWG-05-1SD 180 | 540 : 1 | 115 (32X18) | (F-20), F-25 , F-30 | 15900 | 11727 | 99 |
| SBWG-55-1SD 180 | 558 : 1 | 125 (32X18) | F-25 , F-30 | 23500 | 17333 | 120 |
| SBWG-06-1SD 180 | 1024 : 1 | 140 (36X20) | F-25 , F-30 , F-35 | 32800 | 24192 | 198 |
| SBWG-07-1SD 180 | 1088 : 1 | 180 (45X25) | F-30 , F-35 , F-40 | 51100 | 37689 | 296 |
| SBWG-75-1SD 180 | 1650 : 1 | 210 (50X28) | F-35 , F-40 , F-48 | 81500 | 60111 | 464 |
| SBWG-08-1SD 180 | 1650 : 1 | 250 (56X32) | F-40 , F-48 | 121000 | 89245 | 589 |
| SBWG-09-1SD 180 | 1650 : 1 | 280 (63X32) | F-48 , F-60 | 192500 | 141981 | 947 |
| SBWG-10-1SD 180 | 1600 : 1 | 320 (70X36) | F-60 | 275000 | 202830 | 1482 |
| SBWG-11-1SD 180 | 1700 : 1 | 360 (80X40) | F-60 | 442000 | 326002 | 2240 |
| * SBWG-12-1SD 180 | 1750 : 1 | 400 (90X45) | F-60 , (F-80) | 610000 | 449913 | 3103 |
| * SBWG-13-1SD 180 | 1800 : 1 | 420 (100X50) | F-60 , (F-80) | 970000 | 715435 | 4005 |

Size and component specification in this catalogue are subject to change without prior notice for quality improvement.
* Mark has been changed and updated.

# PART TURN 45°90°135°180°225°270°315°360°

## Traveling Nut Stop : Horizontal Input

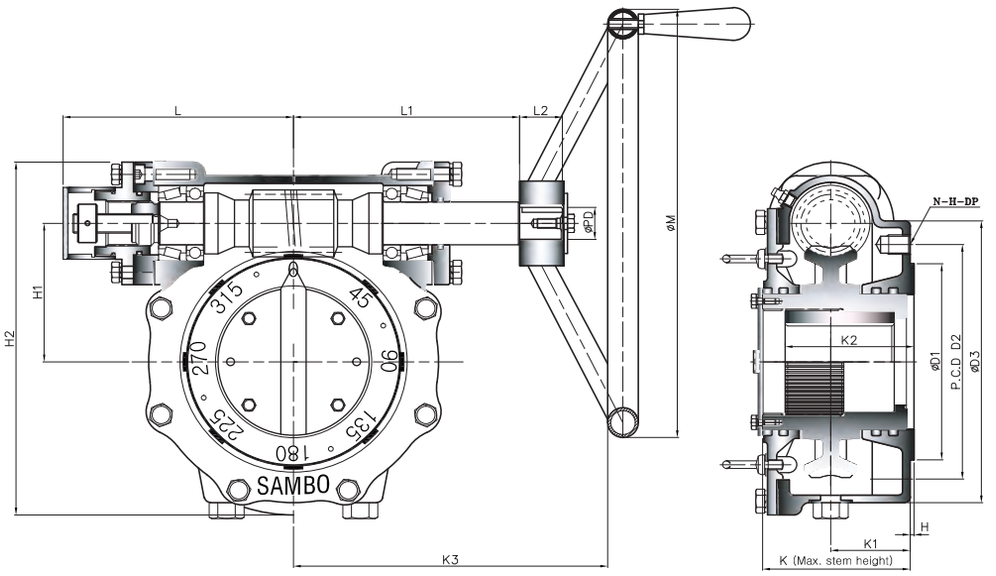


• Pin hole size is same as tap out diameter

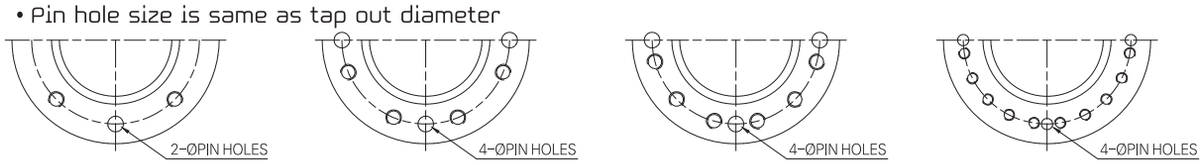


TYPE - A TYPE - B TYPE - C TYPE - D

## Dimension >>>

UNIT : mm

| MODEL \ DIM | BASE PART | | | | | | | EXTERNAL PART | | | | | | | | INPUT SHAFT PART | | | HAND WHEEL |
|---|---|---|---|---|---|---|---|---|---|---|---|---|---|---|---|---|---|---|---|
| | TYPE | FLANGE | ØD1 | P.C.D ØD2 | P.C.D N-H-DP | ØD3 | H | H1 | H2 | K | K1 | K2 | K3 | L | L1 | L2 | ØPD | KEY | |
| * SBWG-BFTN | A | F-07 | 55 | 70 | 4-M8-12 | 110 | 2 | 42 | 132 | 76 | 38 | 38.6 | 150 | 145 | 97 | 24 | 16 | 6X6 | 200 |
| SBWG-0TN | | F-10 | 70 | 102 | 4-M10-15 | 135 | | 57 | 159.5 | 77 | 38 | 43.6 | 177 | 152.5 | 104.5 | | | | 250 |
| SBWG-00TN | | F-12 | 85 | 125 | 4-M12-18 | 165 | | 69.5 | 192 | 86.5 | 43 | 53.6 | 230 | 181 | 138 | 29 | 21 | 6X6 | 300 |
| SBWG-01TN | | F-14 | 100 | 140 | 4-M16-24 | 190 | | 82.5 | 217.5 | 96 | 53 | 65 | 260 | 190 | 147 | | | | 400 |
| SBWG-02TN | | F-16 | 130 | 165 | 4-M20-30 | 220 | | 97 | 257 | 111.5 | 58 | 75.5 | 294 | 228 | 166 | 34 | 26 | 8X7 | 500 |
| SBWG-03TN | B | F-16 (F-20) | 160 | 205 | 8-M16-24 | 250 | 3 | 112 | 287 | 118 | 61 | 87 | 324 | 238 | 176 | 34 | 26 | 8X7 | 560 |
| SBWG-35TN | | F-25 | 200 | 254 | 8-M16-24 | 300 | | 127 | 319.5 | 126 | 63 | 91 | 329 | 243 | 194 | | | | |
| SBWG-04TN | | F-25 | 200 | 254 | 8-M16-24 | 300 | | 153 | 385.5 | 147 | 73 | 120 | 370 | 352 | 207 | 34 | 32 | 10X8 | 630 |
| * SBWG-05TN | | F-30 | 230 | 298 | 8-M20-30 | 350 | | 180 | 437.5 | 155 | 78 | 141 | 400 | 362 | 217 | | | | 710 |
| SBWG-55TN | | | | | | 350 | | 202 | 484.5 | 162 | 80 | 144 | 420 | 382 | 237 | | | | |
| SBWG-06TN | | F-35 | 260 | 356 | 8-M30-45 | 415 | | 230 | 558.5 | 200 | 109 | 175 | 489 | 497 | 286 | 44 | 38 | 12X8 | 800 |
| SBWG-07TN | | F-40 | 300 | 406 | 8-M36-55 | 475 | | 280.5 | 660.5 | 227 | 116 | 209 | 538 | 532 | 320 | | | | 900 |
| SBWG-75TN | C | F-48 | 370 | 483 | 12-M36-55 | 560 | 5 | 326 | 776 | 246 | 120 | 220 | 617 | 621 | 381 | 58 | 50 | 16X10 | 1000 |
| SBWG-08TN | | | | | | 560 | | 379 | 884 | 254 | 125 | 245 | 652 | 656 | 416 | | | | |
| SBWG-09TN | D | F-60 | 470 | 603 | 20-M36-55 | 700 | 5 | 448.5 | 1023.5 | 284 | 138 | 270 | 692 | 696 | 456 | 58 | 50 | 16X10 | 1000 |
| SBWG-10TN | | | | | | 800 | | 513 | 1191 | 352 | 164 | 330 | 814 | 845 | 614 | | | | |
| SBWG-11TN | | | | | | 900 | | 616.5 | 1399.5 | 400 | 181 | 370 | 857 | 886.5 | 657 | | | | |
| * SBWG-12TN | | F-80 | 670 | 813 | 20-M42-63 | 1000 | | 711 | 1621 | 484 | 265 | 455 | 980 | 1056 | 702 | | | | |
| * SBWG-13TN | | | | | | 1000 | | 809 | 1814 | 546 | 301 | 515 | 988 | 1096 | 752 | | | | |

Size and component specification in this catalogue are subject to change without prior notice for quality improvement.
* Mark has been changed and updated.

## Feature >>>

- All mounting bases conform to ISO 5210/1 standards.
- All castings are ductile iron, Class 65-45-12 excellent strength and impact resistance.
- Worm gear material is available in two option.
  - Ductile iron,Class 80-55-06
  - Aluminum bronze, B148-C95800
- Worm is 1045 heat treated Carbon steel.
- Removable splined bushing to permit accurate positioning between gear drive and valve stem.
- Options include hand wheels, chain and etc.

### Bushing Type

Splines permit accurate alignment of valve stem key.

## Traveling Nut Stop >>>

- If worm gear actuators are supplied on a valve, the end stops are already set.
- In case end stops need to be adjusted set end position OPEN first, if the exact end position of the valve can not be seen through a position marking at the valve shaft, the setting may have to be done with the valve removed.

[SETTING]

- Remove all bolts⑧ at stop cover④
- Turn valve manually to end position OPEN.
- In case stop cover.④ do not correspond to the threads of the housing. Take off the stop covers.④ and place it in the required positon.
- Fit bolts⑧ withe washers and fasten them evently.
- Finally, protective cap① remove, turn stop nut② to adjust end position CLOSE.

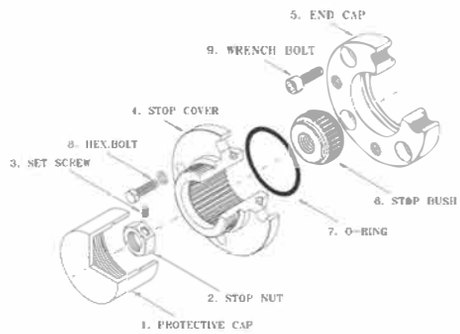


## Selection Chart for Manual Operation >>>

| SIZE / MODEL | GEAR RATIO | MAX. STEM ACCEPTANCE | BASE MOUNTING OPTION & STANDARD | MAX. TORQUE CAPACITY | | WEIGHT |
|---|---|---|---|---|---|---|
| | | | | N-m | Ft . lbf | Kg |
| * SBWG-BFTN | 32 : 1 | 20 (6X6) | F-05, F-07 | 360 | 266 | 6 |
| SBWG-0TN | 36 : 1 | 28 (8X7) | F-07 , F-10 | 780 | 575 | 9 |
| SBWG-00TN | 40 : 1 | 36 (10X8) | F-10 , F-12 | 1200 | 885 | 13 |
| SBWG-01TN | 44 : 1 | 46 (14X9) | F-10 , F-12 , F-14 | 2000 | 1475 | 16 |
| SBWG-02TN | 48 : 1 | 60 (18X11) | F-12 , F-14 , F-16 | 2800 | 2065 | 25 |
| SBWG-03TN | 52 : 1 | 75 (20X12) | F-14 , F-16 , (F-20) | 4300 | 3172 | 34 |
| SBWG-35TN | 52 : 1 | 80 (22X14) | F-16 , (F-20), F-25 | 6100 | 4499 | 39 |
| SBWG-04TN | 56 : 1 | 95 (25X14) | F-16 , (F-20) , F-25 | 10400 | 7671 | 63 |
| * SBWG-05TN | 60 : 1 | 115 (32X18) | (F-20), F-25 , F-30 | 15900 | 11727 | 85 |
| SBWG-55TN | 62 : 1 | 125 (32X18) | F-25 , F-30 | 23500 | 17333 | 105 |
| SBWG-06TN | 64 : 1 | 140 (36X20) | F-25 , F-30 , F-35 | 32800 | 24192 | 155 |
| SBWG-07TN | 68 : 1 | 180 (45X25) | F-30 , F-35 , F-40 | 51100 | 37689 | 254 |
| SBWG-75TN | 66 : 1 | 210 (50X28) | F-35 , F-40 , F-48 | 81500 | 60111 | 364 |
| SBWG-08TN | 66 : 1 | 250 (56X32) | F-40 , F-48 | 121000 | 89245 | 489 |
| SBWG-09TN | 66 : 1 | 280 (63X32) | F-48 , F-60 | 192500 | 141981 | 848 |
| SBWG-10TN | 64 : 1 | 320 (70X36) | F-60 | 275000 | 202830 | 1352 |
| SBWG-11TN | 68 : 1 | 360 (80X40) | F-60 | 442000 | 326002 | 2113 |
| * SBWG-12TN | 70 : 1 | 400 (90X45) | F-60 , (F-80) | 610000 | 449913 | 2931 |
| * SBWG-13TN | 72 : 1 | 420 (100X50) | F-60 , (F-80) | 970000 | 715435 | 3835 |

Size and component specification in this catalogue are subject to change without prior notice for quality improvement.
* Mark has been changed and updated.

# PART TURN 45°90°135°180°225°270°315°360°

## Traveling Nut Stop : Horizontal Input with Single Reduction Gear Attachment

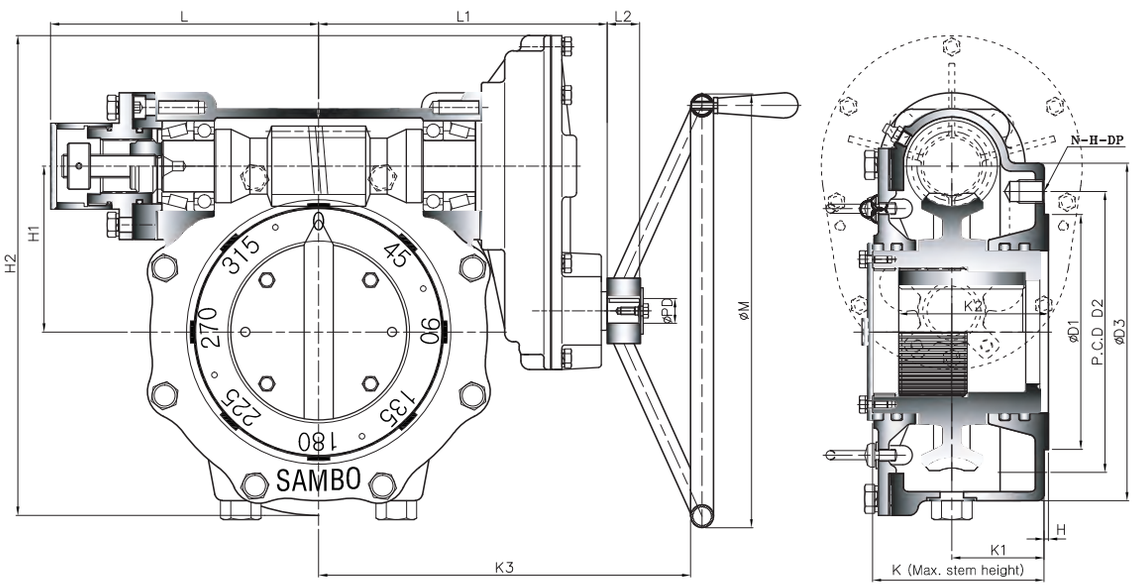


• Pin hole size is same as tap out diameter

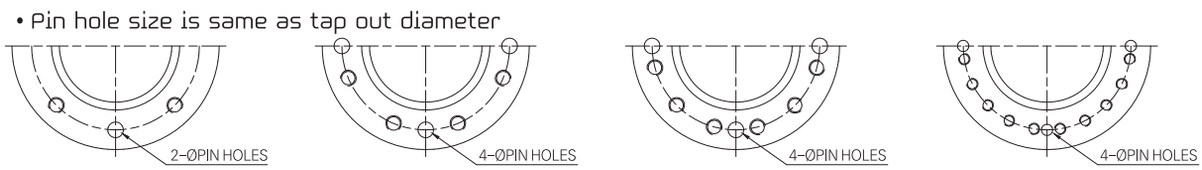


TYPE - A TYPE - B TYPE - C TYPE - D

## Dimension >>>

UNIT : mm

| MODEL \ DIM | BASE PART | | | | | | | EXTERNAL PART | | | | | | | | INPUT SHAFT PART | | | HAND WHEEL |
|---|---|---|---|---|---|---|---|---|---|---|---|---|---|---|---|---|---|---|---|
| | TYPE | FLANGE | ØD1 | P.C.D ØD2 | P.C.D N-H-DP | ØD3 | H | H1 | H2 | K | K1 | K2 | K3 | L | L1 | L2 | ØPD | KEY | |
| SBWG-00TN-1S | A | F-12 | 85 | 125 | 4-M12-18 | 165 | 2 | 69.5 | 210 | 86.5 | 43 | 53.6 | 259 | 181 | 166 | 29 | 21 | 6X6 | 300 |
| SBWG-01TN-1S | | F-14 | 100 | 140 | 4-M16-24 | 190 | | 82.5 | 235.5 | 96 | 53 | 65 | 288 | 190 | 175 | | | | 400 |
| SBWG-02TN-1S | | F-16 | 130 | 165 | 4-M20-30 | 220 | | 97 | 282 | 111.5 | 58 | 75.5 | 329 | 228 | 190.5 | 34 | 26 | 8X7 | 500 |
| SBWG-03TN-1S | B | F-16 (F-20) | 160 | 205 | 8-M16-24 | 250 | 3 | 112 | 312 | 118 | 61 | 87 | 349 | 238 | 200.5 | 34 | 26 | 8X7 | 560 |
| SBWG-35TN-1S | | F-25 | 200 | 254 | 8-M16-24 | 300 | | 127 | 339.5 | 126 | 63 | 91 | 367 | 243 | 212.5 | | | | |
| SBWG-04TN-1S | | F-25 | 200 | 254 | 8-M16-24 | 300 | | 153 | 417.5 | 147 | 73 | 120 | 413 | 352 | 250 | 34 | 32 | 10X8 | 630 |
| * SBWG-05TN-1S | | F-30 | 230 | 298 | 8-M20-30 | 350 | | 180 | 469.5 | 155 | 78 | 141 | 443 | 362 | 260 | | | | 710 |
| SBWG-55TN-1S | | | | | | 350 | | 202 | 516.5 | 162 | 80 | 144 | 463 | 382 | 280 | | | | |
| SBWG-06TN-1S | | F-35 | 260 | 356 | 8-M30-45 | 415 | | 230 | 621 | 200 | 109 | 175 | 552 | 497 | 349 | 44 | 38 | 12X8 | 800 |
| SBWG-07TN-1S | | F-40 | 300 | 406 | 8-M36-55 | 475 | | 280.5 | 723 | 227 | 116 | 209 | 607 | 532 | 384 | | | | 900 |
| SBWG-75TN-1S | C | F-48 | 370 | 483 | 12-M36-55 | 560 | 5 | 326 | 860 | 246 | 120 | 220 | 721 | 621 | 485 | 58 | 50 | 16X10 | 1000 |
| SBWG-08TN-1S | | | | | | 560 | | 379 | 968 | 254 | 125 | 245 | 756 | 656 | 520 | | | | |
| SBWG-09TN-1S | D | F-60 | 470 | 603 | 20-M36-55 | 700 | 5 | 448.5 | 1107.5 | 284 | 138 | 270 | 796 | 696 | 560 | 58 | 50 | 16X10 | 1000 |
| SBWG-10TN-1S | | | | | | 800 | | 513 | 1291 | 352 | 164 | 330 | 927 | 845 | 691 | | | | |
| SBWG-11TN-1S | | | | | | 900 | | 616.5 | 1499.5 | 400 | 181 | 370 | 969.5 | 886.5 | 733.5 | | | | |
| * SBWG-12TN-1S | | F-80 | 670 | 813 | 20-M42-63 | 1000 | | 711 | 1751 | 484 | 265 | 455 | 1140 | 1056 | 905 | | | | |
| * SBWG-13TN-1S | | | | | | 1000 | | 809 | 1944 | 546 | 301 | 515 | 1190 | 1096 | 955 | | | | |

Size and component specification in this catalogue are subject to change without prior notice for quality improvement.
* Mark has been changed and updated.

## Feature >>>

- All mounting bases conform to ISO 5210/1 standards.
- All castings are ductile iron, Class 65-45-12 excellent strength and impact resistance.
- Worm gear material is available in two option.
  - Ductile iron,Class 80-55-06
  - Aluminum bronze, B148-C95800
- Worm is 1045 heat treated Carbon steel.
- Removable splined bushing to permit accurate positioning between gear drive and valve stem.
- Options include hand wheels, chain and etc.

Global Leader SAMBO SPIRAL BEVEL GEAR ACTUATORS

The World's Highest Quality!

### Bushing Type

Splines permit accurate alignment of valve stem key.

## Traveling Nut Stop >>>

- If worm gear actuators are supplied on a valve, the end stops are already set.
- In case end stops need to be adjusted set end position OPEN first, if the exact end position of the valve can not be seen through a position marking at the valve shaft, the setting may have to be done with the valve removed.

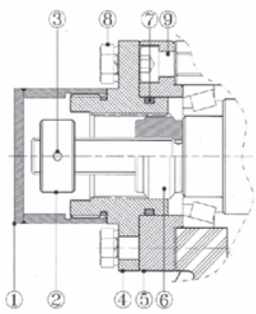


[SETTING]

- Remove all bolts⑧ at stop cover④
- Turn valve manually to end position OPEN.
- In case stop cover.④ do not correspond to the threads of the housing. Take off the stop covers.④ and place it in the required positon.
- Fit bolts⑧ withe washers and fasten them evently.
- Finally, protective cap① remove, turn stop nut② to adjust end position CLOSE.

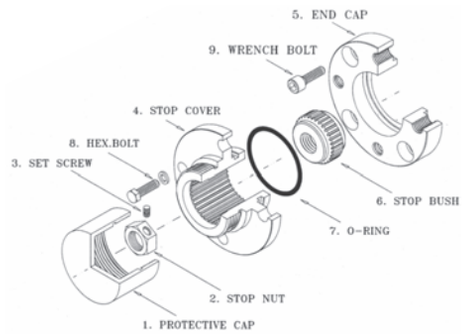


## Selection Chart for Manual Operation >>>

| SIZE / MODEL | GEAR RATIO | MAX. STEM ACCEPTANCE | BASE MOUNTING OPTION & STANDARD | MAX. TORQUE CAPACITY | | WEIGHT |
|---|---|---|---|---|---|---|
| | | | | N–m | Ft . lbf | Kg |
| SBWG–00TN–1S | 80 : 1 | 36 (10X8) | F–10 , F–12 | 1200 | 885 | 15 |
| SBWG–01TN–1S | 88 : 1 | 46 (14X9) | F–10 , F–12 , F–14 | 2000 | 1475 | 18 |
| SBWG–02TN–1S | 121.6 : 1 | 60 (18X11) | F–12 , F–14 , F–16 | 2800 | 2065 | 29 |
| SBWG–03TN–1S | 131.7 : 1 | 75 (20X12) | F–14 , F–16 , (F–20) | 4300 | 3172 | 38 |
| SBWG–35TN–1S | 131.7 : 1 | 80 (22X14) | F–16 , (F–20) , F–25 | 6100 | 4499 | 43 |
| SBWG–04TN–1S | 168 : 1 | 95 (25X14) | F–16 , (F–20) , F–25 | 10400 | 7671 | 73 |
| * SBWG–05TN–1S | 180 : 1 | 115 (32X18) | (F–20), F–25 , F–30 | 15900 | 11727 | 95 |
| SBWG–55TN–1S | 186 : 1 | 125 (32X18) | F–25 , F–30 | 23500 | 17333 | 115 |
| SBWG–06TN–1S | 256 : 1 | 140 (36X20) | F–25 , F–30 , F–35 | 32800 | 24192 | 183 |
| SBWG–07TN–1S | 272 : 1 | 180 (45X25) | F–30 , F–35 , F–40 | 51100 | 37689 | 283 |
| SBWG–75TN–1S | 330 : 1 | 210 (50X28) | F–35 , F–40 , F–48 | 81500 | 60111 | 436 |
| SBWG–08TN–1S | 330 : 1 | 250 (56X32) | F–40 , F–48 | 121000 | 89245 | 561 |
| SBWG–09TN–1S | 330 : 1 | 280 (63X32) | F–48 , F–60 | 192500 | 141981 | 920 |
| SBWG–10TN–1S | 320 : 1 | 320 (70X36) | F–60 | 275000 | 202830 | 1449 |
| SBWG–11TN–1S | 340 : 1 | 360 (80X40) | F–60 | 442000 | 326002 | 2210 |
| * SBWG–12TN–1S | 350 : 1 | 400 (90X45) | F–60 , (F–80) | 610000 | 449913 | 3110 |
| * SBWG–13TN–1S | 360 : 1 | 420 (100X50) | F–60 , (F–80) | 970000 | 715435 | 4015 |

Size and component specification in this catalogue are subject to change without prior notice for quality improvement.
* Mark has been changed and updated.

# PART TURN 45°90°135°180°225°270°315°360°

## Traveling Nut Stop : Horizontal Input with Double Reduction Gear Attachment

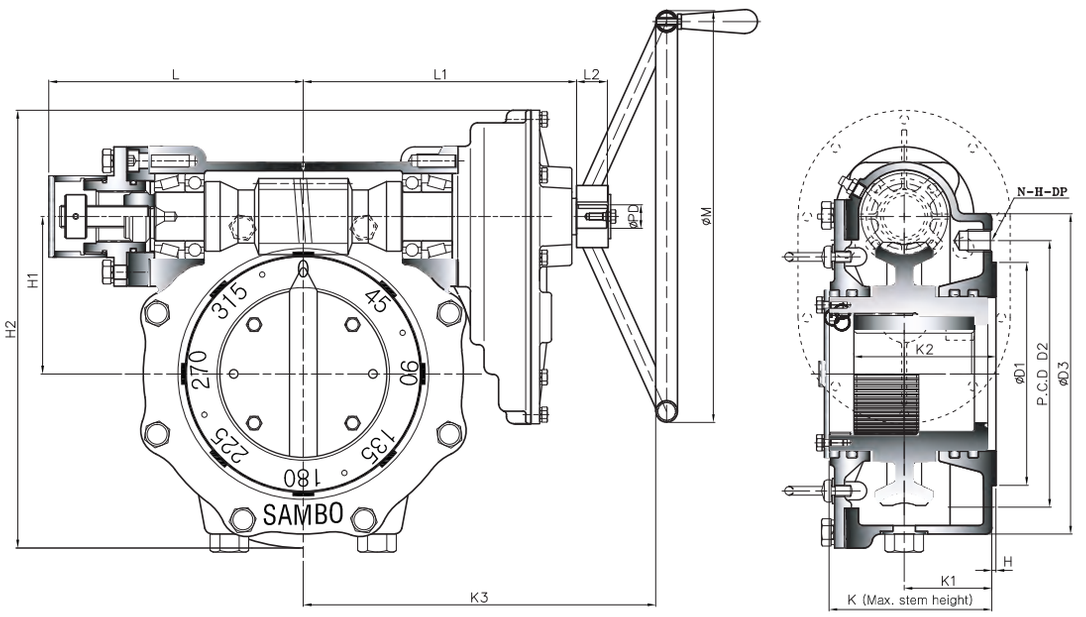


• Pin hole size is same as tap out diameter

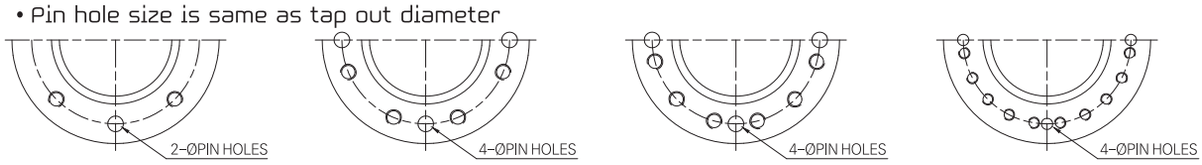


TYPE - A TYPE - B TYPE - C TYPE - D

## Dimension >>>

UNIT : mm

| MODEL \ DIM | BASE PART | | | | | | | EXTERNAL PART | | | | | | | | INPUT SHAFT PART | | | HAND WHEEL |
|---|---|---|---|---|---|---|---|---|---|---|---|---|---|---|---|---|---|---|---|
| | TYPE | FLANGE | ØD1 | P.C.D ØD2 | P.C.D N-H-DP | ØD3 | H | H1 | H2 | K | K1 | K2 | K3 | L | L1 | L2 | ØPD | KEY | |
| SBWG-00TN-1SD | A | F-12 | 85 | 125 | 4-M12-18 | 165 | 2 | 69.5 | 210 | 86.5 | 43 | 53.6 | 276 | 181 | 183 | 29 | 21 | 6X6 | 300 |
| SBWG-01TN-1SD | | F-14 | 100 | 140 | 4-M16-24 | 190 | | 82.5 | 235.5 | 96 | 53 | 65 | 305 | 190 | 192 | | | | 400 |
| SBWG-02TN-1SD | | F-16 | 130 | 165 | 4-M20-30 | 220 | | 97 | 282 | 111.5 | 58 | 75.5 | 343 | 228 | 214.5 | 34 | 26 | 8X7 | 500 |
| SBWG-03TN-1SD | B | F-16 (F-20) | 160 | 205 | 8-M16-24 | 250 | 3 | 112 | 312 | 118 | 61 | 87 | 373 | 238 | 224.5 | 34 | 26 | 8X7 | 560 |
| SBWG-35TN-1SD | | F-25 | 200 | 254 | 8-M16-24 | 300 | | 127 | 339.5 | 126 | 63 | 91 | 391 | 243 | 236.5 | | | | |
| SBWG-04TN-1SD | | F-25 | 200 | 254 | 8-M16-24 | 300 | | 153 | 417.5 | 147 | 73 | 120 | 449 | 352 | 286 | 34 | 32 | 10X8 | 630 |
| * SBWG-05TN-1SD | | F-30 | 230 | 298 | 8-M20-30 | 350 | | 180 | 469.5 | 155 | 78 | 141 | 479 | 362 | 296 | | | | 710 |
| SBWG-55TN-1SD | | | | | | 350 | | 202 | 516.5 | 162 | 80 | 144 | 499 | 382 | 316 | | | | |
| SBWG-06TN-1SD | | F-35 | 260 | 356 | 8-M30-45 | 415 | | 230 | 621 | 200 | 109 | 175 | 579 | 497 | 376 | 44 | 38 | 12X8 | 800 |
| SBWG-07TN-1SD | | F-40 | 300 | 406 | 8-M36-55 | 475 | | 280.5 | 723 | 227 | 116 | 209 | 634 | 532 | 411 | | | | 900 |
| SBWG-75TN-1SD | C | F-48 | 370 | 483 | 12-M36-55 | 560 | 5 | 326 | 860 | 246 | 120 | 220 | 767 | 621 | 531 | 58 | 50 | 16X10 | 1000 |
| SBWG-08TN-1SD | | | | | | 560 | | 379 | 968 | 254 | 125 | 245 | 802 | 656 | 566 | | | | |
| SBWG-09TN-1SD | D | F-60 | 470 | 603 | 20-M36-55 | 700 | 5 | 448.5 | 1107.5 | 284 | 138 | 270 | 842 | 696 | 606 | 58 | 50 | 16X10 | 1000 |
| SBWG-10TN-1SD | | | | | | 800 | | 513 | 1291 | 352 | 164 | 330 | 982 | 845 | 746 | | | | |
| SBWG-11TN-1SD | | | | | | 900 | | 616.5 | 1499.5 | 400 | 181 | 370 | 1039.5 | 886.5 | 788.5 | | | | |
| * SBWG-12TN-1SD | | F-80 | 670 | 813 | 20-M42-63 | 1000 | | 711 | 1751 | 484 | 265 | 455 | 1205 | 1056 | 969 | | | | |
| * SBWG-13TN-1SD | | | | | | 1000 | | 809 | 1944 | 546 | 301 | 515 | 1245 | 1096 | 1009 | | | | |

Size and component specification in this catalogue are subject to change without prior notice for quality improvement.
* Mark has been changed and updated.

## Feature >>>

- All mounting bases conform to ISO 5210/1 standards.
- All castings are ductile iron, Class 65-45-12 excellent strength and impact resistance.
- Worm gear material is available in two option.
  - Ductile iron,Class 80-55-06
  - Aluminum bronze, B148-C95800
- Worm is 1045 heat treated Carbon steel.
- Removable splined bushing to permit accurate positioning between gear drive and valve stem.
- Options include hand wheels, chain and etc.

### Bushing Type

Splines permit accurate alignment of valve stem key.

## Traveling Nut Stop >>>

- If worm gear actuators are supplied on a valve, the end stops are already set.
- In case end stops need to be adjusted set end position OPEN first, if the exact end position of the valve can not be seen through a position marking at the valve shaft, the setting may have to be done with the valve removed.

[SETTING]

- Remove all bolts⑧ at stop cover④
- Turn valve manually to end position OPEN.
- In case stop cover.④ do not correspond to the threads of the housing. Take off the stop covers.④ and place it in the required positon.
- Fit bolts⑧ withe washers and fasten them evently.
- Finally, protective cap① remove, turn stop nut② to adjust end position CLOSE.

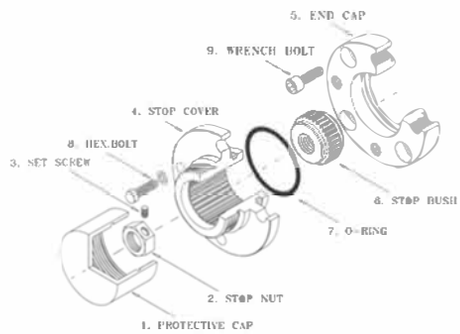


## Selection Chart for Manual Operation >>>

| SIZE / MODEL | MAX. GEAR RATIO (Changeable) | MAX. STEM ACCEPTANCE | BASE MOUNTING OPTION & STANDARD | MAX. TORQUE CAPACITY | | WEIGHT |
|---|---|---|---|---|---|---|
| | | | | N-m | Ft . lbf | Kg |
| SBWG-00TN-1SD | 160 : 1 | 36 (10X8) | F-10 , F-12 | 1200 | 885 | 17 |
| SBWG-01TN-1SD | 176 : 1 | 46 (14X9) | F-10 , F-12 , F-14 | 2000 | 1475 | 20 |
| SBWG-02TN-1SD | 308 : 1 | 60 (18X11) | F-12 , F-14 , F-16 | 2800 | 2065 | 31 |
| SBWG-03TN-1SD | 333,7 : 1 | 75 (20X12) | F-14 , F-16 , (F-20) | 4300 | 3172 | 40 |
| SBWG-35TN-1SD | 333,7 : 1 | 80 (22X14) | F-16 , (F-20), F-25 | 6100 | 4499 | 45 |
| SBWG-04TN-1SD | 504 : 1 | 95 (25X14) | F-16 , (F-20) , F-25 | 10400 | 7671 | 78 |
| * SBWG-05TN-1SD | 540 : 1 | 115 (32X18) | (F-20), F-25 , F-30 | 15900 | 11727 | 100 |
| SBWG-55TN-1SD | 558 : 1 | 125 (32X18) | F-25 , F-30 | 23500 | 17333 | 120 |
| SBWG-06TN-1SD | 1024 : 1 | 140 (36X20) | F-25 , F-30 , F-35 | 32800 | 24192 | 196 |
| SBWG-07TN-1SD | 1088 : 1 | 180 (45X25) | F-30 , F-35 , F-40 | 51100 | 37689 | 296 |
| SBWG-75TN-1SD | 1650 : 1 | 210 (50X28) | F-35 , F-40 , F-48 | 81500 | 60111 | 464 |
| SBWG-08TN-1SD | 1650 : 1 | 250 (56X32) | F-40 , F-48 | 121000 | 89245 | 589 |
| SBWG-09TN-1SD | 1650 : 1 | 280 (63X32) | F-48 , F-60 | 192500 | 141981 | 948 |
| SBWG-10TN-1SD | 1600 : 1 | 320 (70X36) | F-60 | 275000 | 202830 | 1487 |
| SBWG-11TN-1SD | 1700 : 1 | 360 (80X40) | F-60 | 442000 | 326002 | 2248 |
| * SBWG-12TN-1SD | 1750 : 1 | 400 (90X45) | F-60 , (F-80) | 610000 | 449913 | 3111 |
| * SBWG-13TN-1SD | 1800 : 1 | 420 (100X50) | F-60 , (F-80) | 970000 | 715435 | 4015 |

Size and component specification in this catalogue are subject to change without prior notice for quality improvement.
* Mark has been changed and updated.

# MULTI TURN
## Horizontal Input

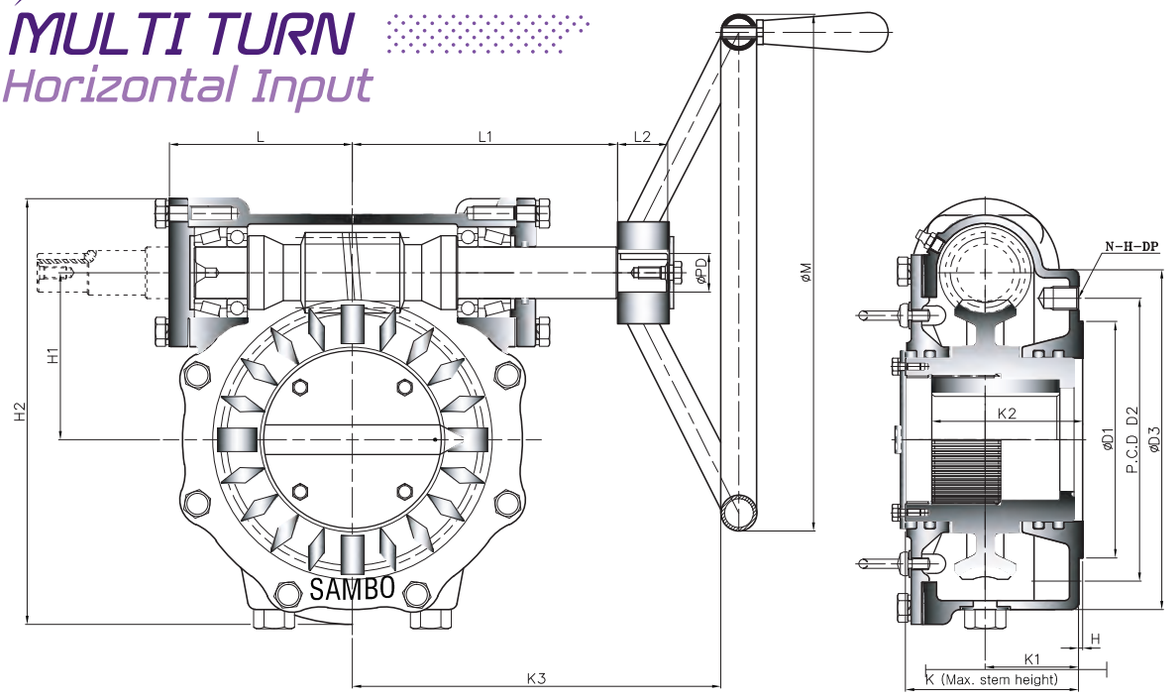


• Pin hole size is same as tap out diameter

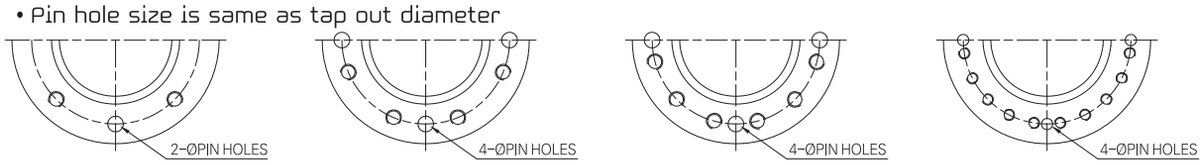


TYPE - A TYPE - B TYPE - C TYPE - D

## Dimension >>>

UNIT : mm

| MODEL \ DIM | BASE PART | | | | | | | EXTERNAL PART | | | | | | | | INPUT SHAFT PART | | | HAND WHEEL |
|---|---|---|---|---|---|---|---|---|---|---|---|---|---|---|---|---|---|---|---|
| | TYPE | FLANGE | ØD1 | P.C.D ØD2 | P.C.D N-H-DP | ØD3 | H | H1 | H2 | K | K1 | K2 | K3 | L | L1 | L2 | ØPD | KEY | |
| * SBWG-BFMT | A | F-07 | 55 | 70 | 4-M8-12 | 110 | 2 | 42 | 132 | 76 | 38 | 38.6 | 150 | 64 | 97 | 24 | 16 | 6X6 | 200 |
| SBWG-0MT | | F-10 | 70 | 102 | 4-M10-15 | 135 | | 57 | 159.5 | 77 | 38 | 43.6 | 177 | 71.5 | 104.5 | | | | 250 |
| SBWG-00MT | | F-12 | 85 | 125 | 4-M12-18 | 165 | | 69.5 | 192 | 86.5 | 43 | 53.6 | 230 | 86 | 138 | 29 | 21 | 6X6 | 300 |
| SBWG-01MT | | F-14 | 100 | 140 | 4-M16-24 | 190 | | 82.5 | 217.5 | 96 | 53 | 65 | 260 | 95 | 147 | | | | 400 |
| SBWG-02MT | | F-16 | 130 | 165 | 4-M20-30 | 220 | | 97 | 257 | 111.5 | 58 | 75.5 | 294 | 108 | 166 | 34 | 26 | 8X7 | 500 |
| SBWG-03MT | B | F-16 (F-20) | 160 | 205 | 8-M16-24 | 250 | 3 | 112 | 287 | 118 | 61 | 87 | 324 | 118 | 176 | 34 | 26 | 8X7 | 560 |
| SBWG-35MT | | F-25 | 200 | 254 | 8-M16-24 | 300 | | 127 | 327 | 135 | 72 | 100 | 329 | 125 | 181 | | | | |
| SBWG-04MT | | F-25 | 200 | 254 | 8-M16-24 | 300 | | 153 | 385.5 | 147 | 73 | 120 | 370 | 153 | 207 | 34 | 32 | 10X8 | 630 |
| * SBWG-05MT | | F-30 | 230 | 298 | 8-M20-30 | 350 | | 180 | 437.5 | 155 | 78 | 141 | 400 | 163 | 217 | | | | 710 |
| SBWG-55MT | | | | | | 350 | | 202 | 484.5 | 162 | 80 | 144 | 420 | 183 | 237 | | | | |
| SBWG-06MT | | F-35 | 260 | 356 | 8-M30-45 | 415 | | 230 | 558.5 | 200 | 109 | 173 | 489 | 217 | 286 | 44 | 38 | 12X8 | 800 |
| SBWG-07MT | | F-40 | 300 | 406 | 8-M36-55 | 475 | | 280.5 | 660.5 | 227 | 116 | 209 | 538 | 252 | 315 | | | | 900 |
| SBWG-75MT | C | F-48 | 370 | 483 | 12-M36-55 | 560 | 5 | 326 | 776 | 246 | 120 | 220 | 617 | 279 | 381 | 58 | 50 | 16X10 | 1000 |
| SBWG-08MT | | | | | | 560 | | 379 | 884 | 254 | 125 | 245 | 652 | 314 | 416 | | | | |
| SBWG-09MT | D | F-60 | 470 | 603 | 20-M36-55 | 700 | 5 | 448.5 | 1023.5 | 284 | 138 | 270 | 692 | 354 | 456 | 58 | 50 | 16X10 | 1000 |
| SBWG-10MT | | | | | | 800 | | 513 | 1191 | 352 | 164 | 330 | 814 | 426 | 614 | | | | |
| SBWG-11MT | | | | | | 900 | | 616.5 | 1399.5 | 394 | 181 | 370 | 857 | 468.5 | 657 | | | | |
| * SBWG-12MT | | F-80 | 670 | 813 | 20-M42-63 | 1000 | | 711 | 1621 | 482 | 265 | 415 | 980 | 554 | 702 | | | | |
| * SBWG-13MT | | | | | | 1000 | | 809 | 1814 | 546 | 301 | 515 | 988 | 609 | 752 | | | | |

Size and component specification in this catalogue are subject to change without prior notice for quality improvement.
* Mark has been changed and updated.

## Feature >>>

- All mounting bases conform to ISO 5210/1 standards.
- All castings are ductile iron, Class 65-45-12 excellent strength and impact resistance.
- Worm gear material is available in two option.
  - Ductile iron,Class 80-55-06
  - Aluminum bronze, B148-C95800
- Worm is 1045 heat treated Carbon steel.
- Removable splined bushing to permit accurate positioning between gear drive and valve stem.
- Options include hand wheels, chain and etc.

### Bushing Type

Splines permit accurate alignment of valve stem key.

### M·O·V OPTION

Worm Gear can be provided with Motor actuator input flanges to accept standard ISO Mounting Base.

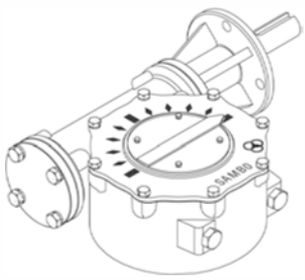

### LOCKING DEVICE OPTION

Input can be equipped with a Handwheel locking device for Manually operated units.

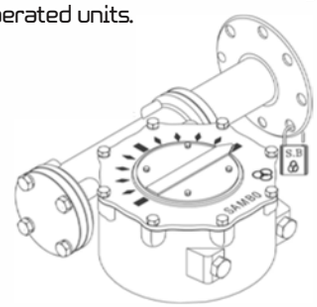

## Selection Chart for Manual Operation >>>

| SIZE / MODEL | GEAR RATIO | MAX. STEM ACCEPTANCE | BASE MOUNTING OPTION & STANDARD | MAX. TORQUE CAPACITY | | WEIGHT |
|---|---|---|---|---|---|---|
| | | | | N-m | Ft . lbf | Kg |
| * SBWG-BFMT | 32 : 1 | 20 (6X6) | F-05, F-07 | 360 | 266 | 6 |
| SBWG-0MT | 36 : 1 | 28 (8X7) | F-07 , F-10 | 780 | 575 | 9 |
| SBWG-00MT | 40 : 1 | 36 (10X8) | F-10 , F-12 | 1200 | 885 | 13 |
| SBWG-01MT | 44 : 1 | 46 (14X9) | F-10 , F-12 , F-14 | 2000 | 1475 | 16 |
| SBWG-02MT | 48 : 1 | 60 (18X11) | F-12 , F-14 , F-16 | 2800 | 2065 | 25 |
| SBWG-03MT | 52 : 1 | 75 (20X12) | F-14 , F-16 , (F-20) | 4300 | 3172 | 34 |
| SBWG-35MT | 52 : 1 | 80 (22X14) | F-16 , (F-20) , F-25 | 6100 | 4499 | 49 |
| SBWG-04MT | 56 : 1 | 95 (25X14) | F-16 , (F-20) , F-25 | 10400 | 7671 | 63 |
| * SBWG-05MT | 60 : 1 | 115 (32X18) | (F-20), F-25 , F-30 | 15900 | 11727 | 85 |
| SBWG-55MT | 62 : 1 | 125 (32X18) | F-25 , F-30 | 23500 | 17333 | 105 |
| SBWG-06MT | 64 : 1 | 140 (36X20) | F-25 , F-30 , F-35 | 32800 | 24192 | 155 |
| SBWG-07MT | 68 : 1 | 180 (45X25) | F-30 , F-35 , F-40 | 51100 | 37689 | 254 |
| SBWG-75MT | 66 : 1 | 210 (50X28) | F-35 , F-40 , F-48 | 81500 | 60111 | 364 |
| SBWG-08MT | 66 : 1 | 250 (56X32) | F-40 , F-48 | 121000 | 89245 | 489 |
| SBWG-09MT | 66 : 1 | 280 (63X32) | F-48 , F-60 | 192500 | 141981 | 848 |
| SBWG-10MT | 64 : 1 | 320 (70X36) | F-60 | 275000 | 202830 | 1352 |
| SBWG-11MT | 68 : 1 | 360 (80X40) | F-60 | 442000 | 326002 | 2113 |
| * SBWG-12MT | 70 : 1 | 400 (90X45) | F-60 , (F-80) | 610000 | 449913 | 2931 |
| * SBWG-13MT | 72 : 1 | 420 (100X50) | F-60 , (F-80) | 970000 | 715435 | 3835 |

Size and component specification in this catalogue are subject to change without prior notice for quality improvement.
* Mark has been changed and updated.

# MULTI TURN 360°

## Horizontal Input with Single Reduction Gear Attachment

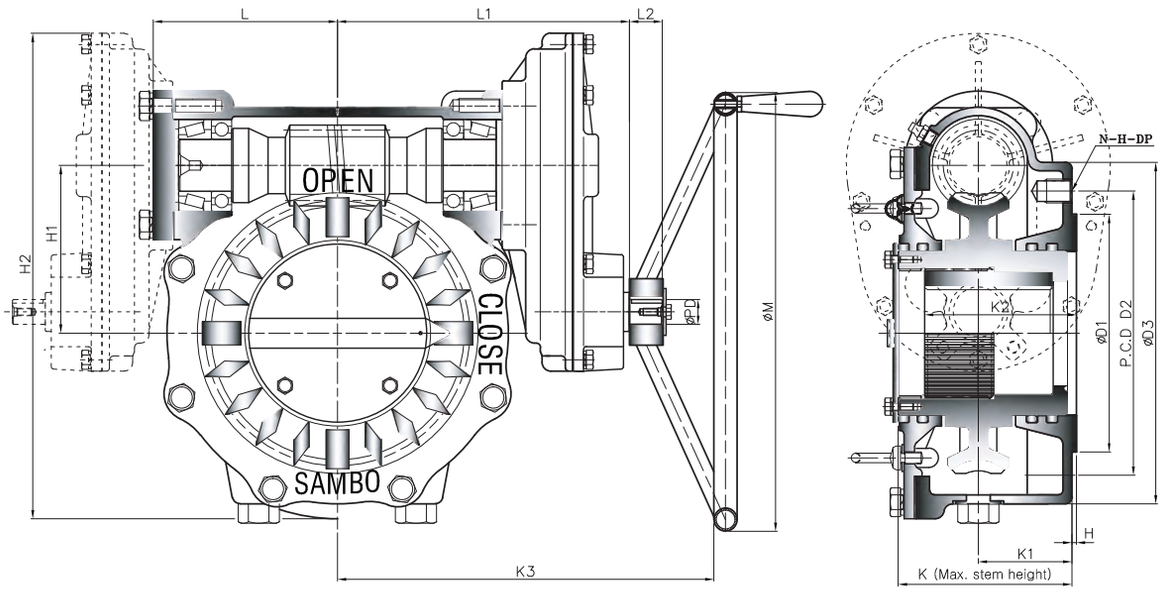


• Pin hole size is same as tap out diameter

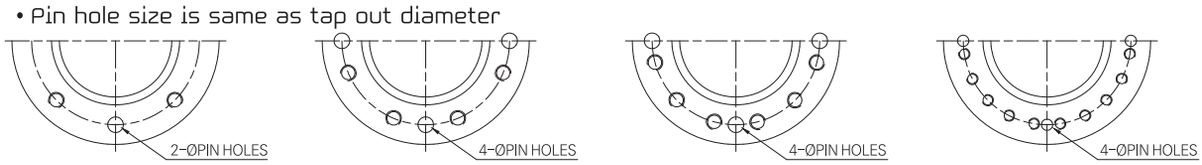


TYPE - A TYPE - B TYPE - C TYPE - D

## Dimension >>>

UNIT : mm

| MODEL \ DIM | BASE PART | | | | | | | EXTERNAL PART | | | | | | | | INPUT SHAFT PART | | | HAND WHEEL |
|---|---|---|---|---|---|---|---|---|---|---|---|---|---|---|---|---|---|---|---|
| | TYPE | FLANGE | ØD1 | P.C.D ØD2 | P.C.D N-H-DP | ØD3 | H | H1 | H2 | K | K1 | K2 | K3 | L | L1 | L2 | ØPD | KEY | |
| SBWG-00MT-1S | A | F-12 | 85 | 125 | 4-M12-18 | 165 | 2 | 69.5 | 210 | 86.5 | 43 | 53.6 | 259 | 86 | 166 | 29 | 21 | 6X6 | 300 |
| SBWG-01MT-1S | | F-14 | 100 | 140 | 4-M16-24 | 190 | | 82.5 | 235.5 | 96 | 53 | 65 | 288 | 95 | 175 | | | | 400 |
| SBWG-02MT-1S | | F-16 | 130 | 165 | 4-M20-30 | 220 | | 97 | 282 | 111.5 | 58 | 75.5 | 329 | 108 | 190.5 | 34 | 26 | 8X7 | 500 |
| SBWG-03MT-1S | B | F-16 (F-20) | 160 | 205 | 8-M16-24 | 250 | 3 | 112 | 312 | 118 | 61 | 87 | 349 | 118 | 200.5 | 34 | 26 | 8X7 | 560 |
| SBWG-35MT-1S | | F-25 | 200 | 254 | 8-M16-24 | 300 | | 127 | 352 | 135 | 72 | 100 | 367 | 136 | 218.5 | | | | |
| SBWG-04MT-1S | | F-25 | 200 | 254 | 8-M16-24 | 300 | | 153 | 417.5 | 147 | 73 | 120 | 413 | 153 | 250 | 34 | 32 | 10X8 | 630 |
| * SBWG-05MT-1S | | F-30 | 230 | 298 | 8-M20-30 | 350 | | 180 | 469.5 | 155 | 78 | 141 | 443 | 163 | 260 | | | | 710 |
| SBWG-55MT-1S | | | | | | 350 | | 202 | 516.5 | 162 | 80 | 144 | 463 | 183 | 280 | | | | |
| SBWG-06MT-1S | | F-35 | 260 | 356 | 8-M30-45 | 415 | | 230 | 621 | 200 | 109 | 173 | 552 | 217 | 349 | 44 | 38 | 12X8 | 800 |
| SBWG-07MT-1S | | F-40 | 300 | 406 | 8-M36-55 | 475 | | 280.5 | 723 | 227 | 116 | 209 | 607 | 252 | 384 | | | | 900 |
| SBWG-75MT-1S | C | F-48 | 370 | 483 | 12-M36-55 | 560 | 5 | 326 | 860 | 246 | 120 | 220 | 721 | 279 | 485 | 58 | 50 | 16X10 | 1000 |
| SBWG-08MT-1S | | | | | | 560 | | 379 | 968 | 254 | 125 | 245 | 756 | 314 | 520 | | | | |
| SBWG-09MT-1S | D | F-60 | 470 | 603 | 20-M36-55 | 700 | 5 | 448.5 | 1107.5 | 284 | 138 | 270 | 796 | 354 | 560 | 58 | 50 | 16X10 | 1000 |
| SBWG-10MT-1S | | | | | | 800 | | 513 | 1291 | 352 | 164 | 330 | 927 | 426 | 691 | | | | |
| SBWG-11MT-1S | | | | | | 900 | | 616.5 | 1499.5 | 394 | 181 | 370 | 969.5 | 468.5 | 733.5 | | | | |
| * SBWG-12MT-1S | | F-80 | 670 | 813 | 20-M42-63 | 1000 | | 711 | 1751 | 482 | 265 | 415 | 1140 | 554 | 905 | | | | |
| * SBWG-13MT-1S | | | | | | 1000 | | 809 | 1944 | 546 | 301 | 515 | 1190 | 609 | 955 | | | | |

Size and component specification in this catalogue are subject to change without prior notice for quality improvement.
* Mark has been changed and updated.

## Feature >>>

- All mounting bases conform to ISO 5210/1 standards.
- All castings are ductile iron, Class 65-45-12 excellent strength and impact resistance.
- Worm gear material is available in two option.
  - Ductile iron,Class 80-55-06
  - Aluminum bronze, B148-C95800
- Worm is 1045 heat treated Carbon steel.
- Removable splined bushing to permit accurate positioning between gear drive and valve stem.
- Options include hand wheels, chain and etc.

### Bushing Type

Splines permit accurate alignment of valve stem key.

### M·O·V OPTION

Worm Gear can be provided with Motor actuator input flanges to accept standard ISO Mounting Base.

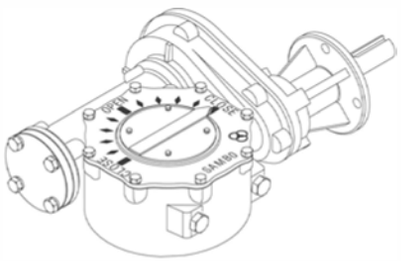

### LOCKING DEVICE OPTION

Input can be equipped with a Handwheel locking device for Manually operated units.

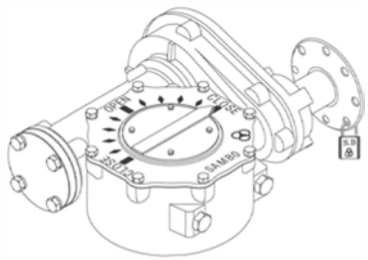

## Selection Chart for Manual Operation >>>

| SIZE / MODEL | GEAR RATIO | MAX. STEM ACCEPTANCE | BASE MOUNTING OPTION & STANDARD | MAX. TORQUE CAPACITY | | WEIGHT |
|---|---|---|---|---|---|---|
| | | | | N-m | Ft . lbf | Kg |
| SBWG-00MT-1S | 80 : 1 | 36 (10X8) | F-10 , F-12 | 1200 | 885 | 15 |
| SBWG-01MT-1S | 88 : 1 | 46 (14X9) | F-10 , F-12 , F-14 | 2000 | 1475 | 18 |
| SBWG-02MT-1S | 121.6 : 1 | 60 (18X11) | F-12 , F-14 , F-16 | 2800 | 2065 | 29 |
| SBWG-03MT-1S | 131.7 : 1 | 75 (20X12) | F-14 , F-16 , (F-20) | 4300 | 3172 | 38 |
| SBWG-35MT-1S | 131.7 : 1 | 80 (22X14) | F-16 , (F-20) , F-25 | 6100 | 4499 | 53 |
| SBWG-04MT-1S | 168 : 1 | 95 (25X14) | F-16 , (F-20) , F-25 | 10400 | 7671 | 73 |
| * SBWG-05MT-1S | 180 : 1 | 115 (32X18) | (F-20), F-25 , F-30 | 15900 | 11727 | 95 |
| SBWG-55MT-1S | 186 : 1 | 125 (32X18) | F-25 , F-30 | 23500 | 17333 | 115 |
| SBWG-06MT-1S | 256 : 1 | 140 (36X20) | F-25 , F-30 , F-35 | 32800 | 24192 | 183 |
| SBWG-07MT-1S | 272 : 1 | 180 (45X25) | F-30 , F-35 , F-40 | 51100 | 37689 | 283 |
| SBWG-75MT-1S | 330 : 1 | 210 (50X28) | F-35 , F-40 , F-48 | 81500 | 60111 | 436 |
| SBWG-08MT-1S | 330 : 1 | 250 (56X32) | F-40 , F-48 | 121000 | 89245 | 561 |
| SBWG-09MT-1S | 330 : 1 | 280 (63X32) | F-48 , F-60 | 192500 | 141981 | 920 |
| SBWG-10MT-1S | 320 : 1 | 320 (70X36) | F-60 | 275000 | 202830 | 1449 |
| SBWG-11MT-1S | 340 : 1 | 360 (80X40) | F-60 | 442000 | 326002 | 2210 |
| * SBWG-12MT-1S | 350 : 1 | 400 (90X45) | F-60 , (F-80) | 610000 | 449913 | 3110 |
| * SBWG-13MT-1S | 360 : 1 | 420 (100X50) | F-60 , (F-80) | 970000 | 715435 | 4015 |

Size and component specification in this catalogue are subject to change without prior notice for quality improvement.
* Mark has been changed and updated.

# MULTI TURN 360°

## Horizontal Input with Double Reduction Gear Attachment

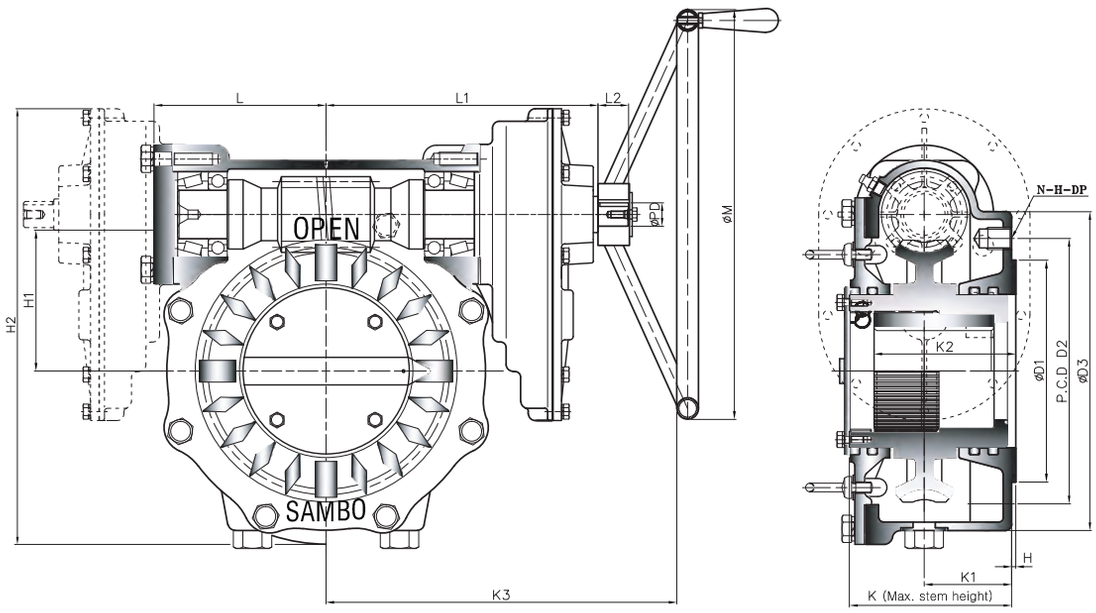


• Pin hole size is same as tap out diameter

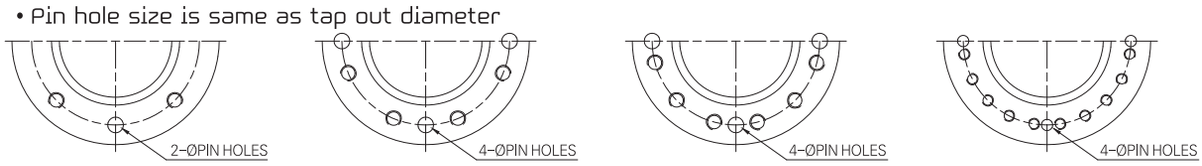


TYPE - A TYPE - B TYPE - C TYPE - D

## Dimension >>>

UNIT : mm

| MODEL \ DIM | BASE PART | | | | | | | EXTERNAL PART | | | | | | | | INPUT SHAFT PART | | | HAND WHEEL |
|---|---|---|---|---|---|---|---|---|---|---|---|---|---|---|---|---|---|---|---|
| | TYPE | FLANGE | ØD1 | P.C.D ØD2 | P.C.D N-H-DP | ØD3 | H | H1 | H2 | K | K1 | K2 | K3 | L | L1 | L2 | ØPD | KEY | |
| SBWG-00MT-1SD | A | F-12 | 85 | 125 | 4-M12-18 | 165 | 2 | 69.5 | 210 | 86.5 | 43 | 53.6 | 276 | 86 | 183 | 29 | 21 | 6X6 | 300 |
| SBWG-01MT-1SD | | F-14 | 100 | 140 | 4-M16-24 | 190 | | 82.5 | 235.5 | 96 | 53 | 65 | 305 | 95 | 192 | | | | 400 |
| SBWG-02MT-1SD | | F-16 | 130 | 165 | 4-M20-30 | 220 | | 97 | 282 | 111.5 | 58 | 75.5 | 343 | 108 | 214.5 | 34 | 26 | 8X7 | 500 |
| SBWG-03MT-1SD | B | F-16 (F-20) | 160 | 205 | 8-M16-24 | 250 | 3 | 112 | 312 | 118 | 61 | 87 | 373 | 118 | 224.5 | 34 | 26 | 8X7 | 560 |
| SBWG-35MT-1SD | | F-25 | 200 | 254 | 8-M16-24 | 300 | | 127 | 352 | 135 | 72 | 100 | 385 | 125 | 236.5 | | | | |
| SBWG-04MT-1SD | | F-25 | 200 | 254 | 8-M16-24 | 300 | | 153 | 417.5 | 147 | 73 | 120 | 449 | 153 | 286 | 34 | 32 | 10X8 | 630 |
| * SBWG-05MT-1SD | | F-30 | 230 | 298 | 8-M20-30 | 350 | | 180 | 469.5 | 155 | 78 | 141 | 479 | 163 | 296 | | | | 710 |
| SBWG-55MT-1SD | | | | | | 350 | | 202 | 516.5 | 162 | 80 | 144 | 499 | 183 | 316 | | | | |
| SBWG-06MT-1SD | | F-35 | 260 | 356 | 8-M30-45 | 415 | | 230 | 621 | 200 | 109 | 173 | 579 | 217 | 376 | 44 | 38 | 12X8 | 800 |
| SBWG-07MT-1SD | | F-40 | 300 | 406 | 8-M36-55 | 475 | | 280.5 | 723 | 227 | 116 | 209 | 634 | 252 | 411 | | | | 900 |
| SBWG-75MT-1SD | C | F-48 | 370 | 483 | 12-M36-55 | 560 | 5 | 326 | 860 | 246 | 120 | 220 | 767 | 279 | 531 | 58 | 50 | 16X10 | 1000 |
| SBWG-08MT-1SD | | | | | | 560 | | 379 | 968 | 254 | 125 | 245 | 802 | 314 | 566 | | | | |
| SBWG-09MT-1SD | D | F-60 | 470 | 603 | 20-M36-55 | 700 | 5 | 448.5 | 1107.5 | 284 | 138 | 270 | 842 | 354 | 606 | 58 | 50 | 16X10 | 1000 |
| SBWG-10MT-1SD | | | | | | 800 | | 513 | 1291 | 352 | 164 | 330 | 982 | 426 | 746 | | | | |
| SBWG-11MT-1SD | | | | | | 900 | | 616.5 | 1499.5 | 394 | 181 | 370 | 1039.5 | 468.5 | 788.5 | | | | |
| * SBWG-12MT-1SD | | F-80 | 670 | 813 | 20-M42-63 | 1000 | | 711 | 1751 | 482 | 265 | 415 | 1205 | 554 | 969 | | | | |
| * SBWG-13MT-1SD | | | | | | 1000 | | 809 | 1944 | 546 | 301 | 515 | 1245 | 609 | 1009 | | | | |

Size and component specification in this catalogue are subject to change without prior notice for quality improvement.
* Mark has been changed and updated.

## Feature >>>

- All mounting bases conform to ISO 5210/1 standards.
- All castings are ductile iron, Class 65-45-12 excellent strength and impact resistance.
- Worm gear material is available in two option.
  - Ductile iron,Class 80-55-06
  - Aluminum bronze, B148-C95800
- Worm is 1045 heat treated Carbon steel.
- Removable splined bushing to permit accurate positioning between gear drive and valve stem.
- Options include hand wheels, chain and etc.

### Bushing Type

Splines permit accurate alignment of valve stem key.

### M·O·V OPTION

Worm Gear can be provided with Motor actuator input flanges to accept standard ISO Mounting Base.

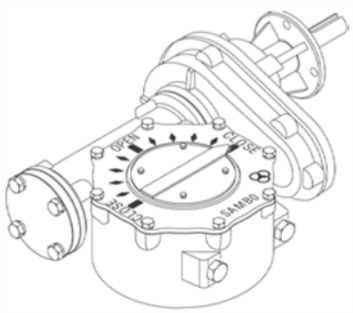


### LOCKING DEVICE OPTION

Input can be equipped with a Handwheel locking device for Manually operated units.

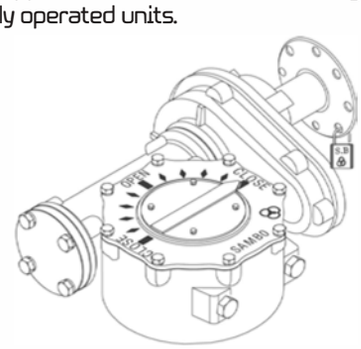


## Selection Chart for Manual Operation >>>

| SIZE / MODEL | MAX. GEAR RATIO (Changeable) | MAX. STEM ACCEPTANCE | BASE MOUNTING OPTION & STANDARD | MAX. TORQUE CAPACITY | | WEIGHT |
|---|---|---|---|---|---|---|
| | | | | N-m | Ft. lbf | Kg |
| SBWG-00MT-1SD | 160 : 1 | 36 (10X8) | F-10 , F-12 | 1200 | 885 | 17 |
| SBWG-01MT-1SD | 176 : 1 | 46 (14X9) | F-10 , F-12 , F-14 | 2000 | 1475 | 20 |
| SBWG-02MT-1SD | 308 : 1 | 60 (18X11) | F-12 , F-14 , F-16 | 2800 | 2065 | 31 |
| SBWG-03MT-1SD | 333.7 : 1 | 75 (20X12) | F-14 , F-16 , (F-20) | 4300 | 3172 | 40 |
| SBWG-35MT-1SD | 333.7 : 1 | 80 (22X14) | F-16 , (F-20) , F-25 | 6100 | 4499 | 55 |
| SBWG-04MT-1SD | 504 : 1 | 95 (25X14) | F-16 , (F-20) , F-25 | 10400 | 7671 | 78 |
| * SBWG-05MT-1SD | 540 : 1 | 115 (32X18) | (F-20), F-25 , F-30 | 15900 | 11727 | 100 |
| SBWG-55MT-1SD | 558 : 1 | 125 (32X18) | F-25 , F-30 | 23500 | 17333 | 120 |
| SBWG-06MT-1SD | 1024 : 1 | 140 (36X20) | F-25 , F-30 , F-35 | 32800 | 24192 | 196 |
| SBWG-07MT-1SD | 1088 : 1 | 180 (45X25) | F-30 , F-35 , F-40 | 51100 | 37689 | 296 |
| SBWG-75MT-1SD | 1650 : 1 | 210 (50X28) | F-35 , F-40 , F-48 | 81500 | 60111 | 464 |
| SBWG-08MT-1SD | 1650 : 1 | 250 (56X32) | F-40 , F-48 | 121000 | 89245 | 589 |
| SBWG-09MT-1SD | 1650 : 1 | 280 (63X32) | F-48 , F-60 | 192500 | 141981 | 948 |
| SBWG-10MT-1SD | 1600 : 1 | 320 (70X36) | F-60 | 275000 | 202830 | 1487 |
| SBWG-11MT-1SD | 1700 : 1 | 360 (80X40) | F-60 | 442000 | 326002 | 2248 |
| * SBWG-12MT-1SD | 1750 : 1 | 400 (90X45) | F-60 , (F-80) | 610000 | 449913 | 3111 |
| * SBWG-13MT-1SD | 1800 : 1 | 420 (100X50) | F-60 , (F-80) | 970000 | 715435 | 4015 |

Size and component specification in this catalogue are subject to change without prior notice for quality improvement.
* Mark has been changed and updated.

# DECLUTCH GEAR

## Horizontal Input

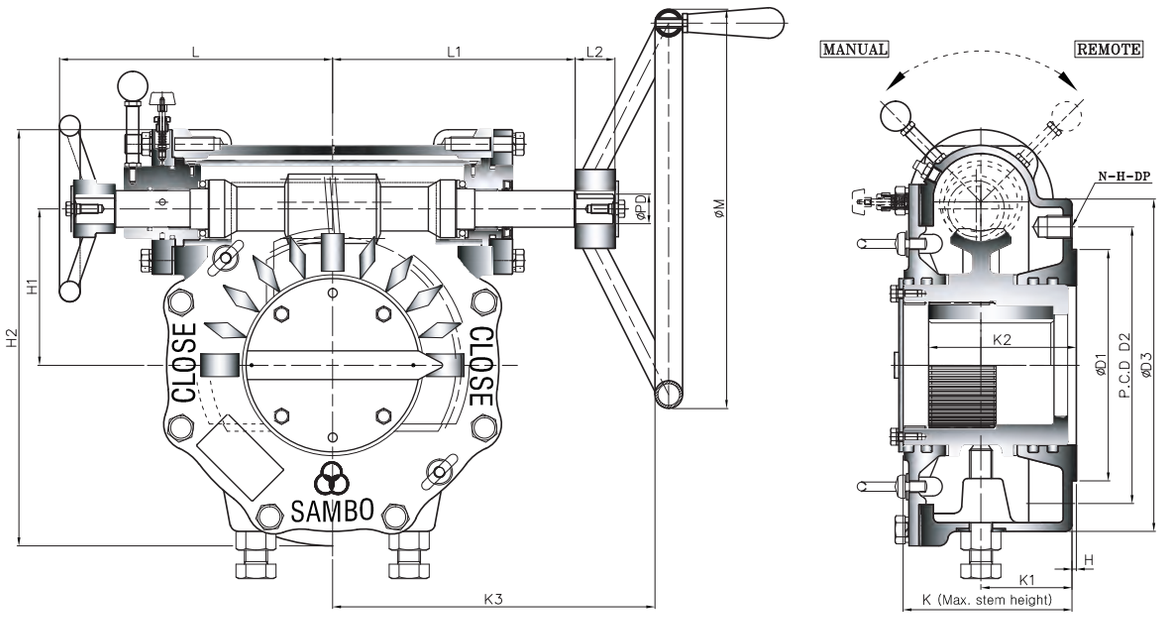


• Pin hole size is same as tap out diameter

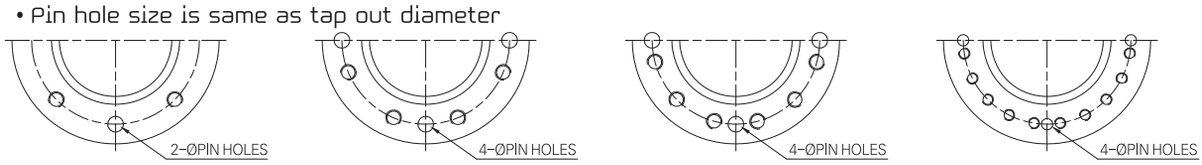


TYPE - A TYPE - B TYPE - C TYPE - D

## Dimension >>>

UNIT : mm

| MODEL \ DIM | BASE PART | | | | | | | EXTERNAL PART | | | | | | | | INPUT SHAFT PART | | | HAND WHEEL |
|---|---|---|---|---|---|---|---|---|---|---|---|---|---|---|---|---|---|---|---|
| | TYPE | FLANGE | ØD1 | P.C.D ØD2 | P.C.D N-H-DP | ØD3 | H | H1 | H2 | K | K1 | K2 | K3 | L | L1 | L2 | ØPD | KEY | |
| * SBWG-BFDC | A | F-07 | 55 | 70 | 4-M8-12 | 110 | 2 | 38.5 | 132 | 76 | 38 | 38.6 | 150 | 104 | 97 | 24 | 16 | 6X6 | 200 |
| SBWG-0DC | | F-10 | 70 | 102 | 4-M10-15 | 135 | | 53.5 | 159.5 | 77 | 38 | 43.6 | 177 | 111.5 | 106.5 | | | | 250 |
| SBWG-00DC | | F-12 | 85 | 125 | 4-M12-18 | 165 | | 69.5 | 198.5 | 90.5 | 43 | 53.6 | 230 | 122 | 138 | 29 | 21 | 6X6 | 300 |
| SBWG-01DC | | F-14 | 100 | 140 | 4-M16-24 | 190 | | 83 | 224.5 | 100 | 53 | 65 | 260 | 131 | 147 | | | | 400 |
| SBWG-02DC | | F-16 | 130 | 165 | 4-M20-30 | 220 | | 95.5 | 262.5 | 112.5 | 56 | 75.5 | 274 | 148 | 139 | 34 | 26 | 8X7 | 500 |
| SBWG-03DC | B | F-16 (F-20) | 160 | 205 | 8-M16-24 | 250 | 3 | 109 | 291 | 118 | 59 | 87 | 297 | 158 | 149 | 34 | 26 | 8X7 | 560 |
| SBWG-35DC | | F-25 | 200 | 254 | 8-M16-24 | 300 | | 127.5 | 340 | 136 | 72 | 100 | 342 | 178 | 194 | | | | |
| SBWG-04DC | | F-25 | 200 | 254 | 8-M16-24 | 300 | | 147 | 385.5 | 147 | 73 | 120 | 370 | 247 | 205.5 | 34 | 32 | 10X8 | 630 |
| * SBWG-05DC | | F-30 | 230 | 298 | 8-M20-30 | 350 | | 174 | 437.5 | 155 | 78 | 141 | 400 | 257 | 215.5 | | | | 710 |
| SBWG-55DC | | | | | | 350 | | 196 | 484.5 | 162 | 80 | 144 | 420 | 277 | 235.5 | | | | |
| SBWG-06DC | | F-35 | 260 | 356 | 8-M30-45 | 415 | | 222 | 558.5 | 200 | 109 | 175 | 489 | 316 | 286 | 44 | 38 | 12X8 | 800 |
| SBWG-07DC | | F-40 | 300 | 406 | 8-M36-55 | 475 | | 272.5 | 660.5 | 227 | 116 | 209 | 538 | 350.5 | 315 | | | | 900 |
| SBWG-75DC | C | F-48 | 370 | 483 | 12-M36-55 | 560 | 5 | 313 | 776 | 246 | 120 | 220 | 617 | 389.5 | 381 | 58 | 50 | 16X10 | 1000 |
| SBWG-08DC | | | | | | 560 | | 366 | 884 | 254 | 125 | 245 | 652 | 424.5 | 416 | | | | |
| SBWG-09DC | D | F-60 | 470 | 603 | 20-M36-55 | 700 | 5 | 435.5 | 1023.5 | 284 | 138 | 270 | 692 | 465 | 456 | 58 | 50 | 16X10 | 1000 |
| SBWG-10DC | | | | | | 800 | | 498 | 1191 | 352 | 164 | 330 | 814 | 550 | 614 | | | | |

Size and component specification in this catalogue are subject to change without prior notice for quality improvement.
* Mark has been changed and updated.

## Feature >>>

- All mounting bases conform to ISO 5210/1 standards.
- All castings are ductile iron, Class 65-45-12 excellent strength and impact resistance.
- Worm gear material is available in two option.
  - Ductile iron,Class 80-55-06
  - Aluminum bronze, B148-C95800
- Worm is 1045 heat treated Carbon steel.
- Removable splined bushing to permit accurate positioning between gear drive and valve stem.
- Options include hand wheels, chain and etc.

Global Leader SAMBO SPIRAL BEVEL GEAR ACTUATORS

The World's Highest Quality!

### Bushing Type

Splines permit accurate alignment of valve stem key.

## Manual Override Operation >>>

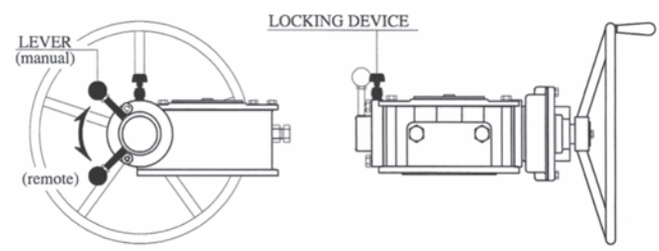


- Somewhere it should be noted that these units have been specifically developed for use with pneumatic and Hydrauric Actuators providing a positve mechanical means of manual operation.

1. Pull up on locking device knob.
2. Rotate lever to "Manual" position.
3. Handwheel can now be operated.
   Note : pneumatic actuator is now fully disengaged.
4. The lever must be placed back in "Remote" position for pneumatic operation.

### CAUTION

- Operate to check the position of manual and remote.
- When convert "manual" position,control the position of worm shaft and then operate to accord with worm gear.

## Selection Chart for Manual Operation >>>

| SIZE / MODEL | GEAR RATIO | MAX. STEM ACCEPTANCE | BASE MOUNTING OPTION & STANDARD | MAX. TORQUE CAPACITY | | WEIGHT |
|---|---|---|---|---|---|---|
| | | | | N–m | Ft . lbf | Kg |
| * SBWG–BFDC | 32 : 1 | 20 (6X6) | F–05, F–07 | 320 | 236 | 4 |
| SBWG–0DC | 36 : 1 | 28 (8X7) | F–07 , F–10 | 680 | 502 | 6 |
| SBWG–00DC | 38 : 1 | 36 (10X8) | F–10 , F–12 | 980 | 723 | 10 |
| SBWG–01DC | 43 : 1 | 46 (14X9) | F–10 , F–12 , F–14 | 1600 | 1180 | 13 |
| SBWG–02DC | 46 : 1 | 60 (18X11) | F–12 , F–14 , F–16 | 2500 | 1844 | 21 |
| SBWG–03DC | 50 : 1 | 75 (20X12) | F–14 , F–16 , (F–20) | 3800 | 2803 | 29 |
| SBWG–35DC | 52 : 1 | 80 (22X14) | F–16 , (F–20) , F–25 | 5600 | 4130 | 43 |
| SBWG–04DC | 56 : 1 | 95 (25X14) | F–16 , (F–20) , F–25 | 9600 | 7081 | 56 |
| * SBWG–05DC | 60 : 1 | 115 (32X18) | (F–20), F–25 , F–30 | 14400 | 10621 | 78 |
| SBWG–55DC | 62 : 1 | 125 (32X18) | F–25 , F–30 | 21150 | 15599 | 97 |
| SBWG–06DC | 64 : 1 | 140 (36X20) | F–25 , F–30 , F–35 | 29520 | 21773 | 147 |
| SBWG–07DC | 68 : 1 | 180 (45X25) | F–30 , F–35 , F–40 | 45000 | 33190 | 243 |
| SBWG–75DC | 65 : 1 | 210 (50X28) | F–35 , F–40 , F–48 | 73350 | 54100 | 350 |
| SBWG–08DC | 65 : 1 | 250 (56X32) | F–40 , F–48 | 108900 | 80321 | 473 |
| SBWG–09DC | 64 : 1 | 280 (63X32) | F–48 , F–60 | 178000 | 131286 | 829 |
| SBWG–10DC | 62 : 1 | 320 (70X36) | F–60 | 253000 | 186600 | 1330 |

Size and component specification in this catalogue are subject to change without prior notice for quality improvement.
* Mark has been changed and updated.

# DECLUTCH GEAR

## Horizontal Input with Single Reduction Gear Attachment

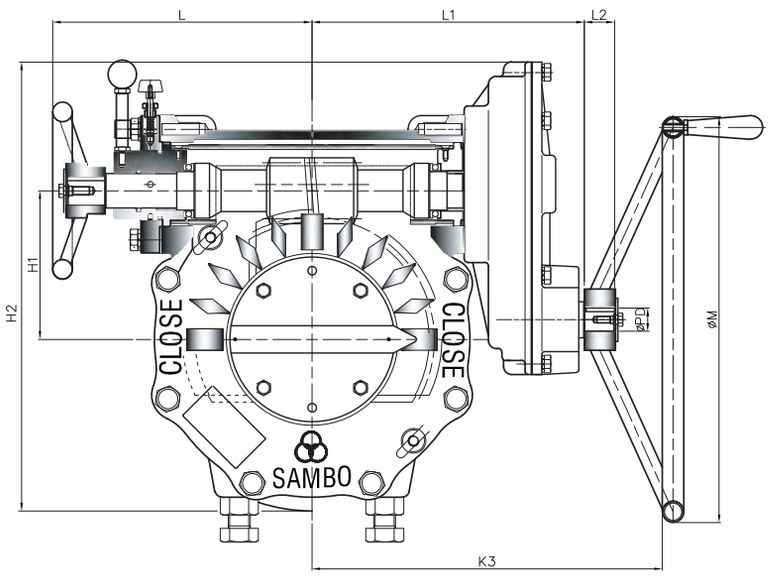


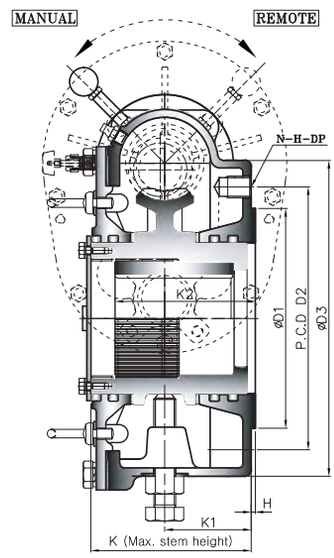


• Pin hole size is same as tap out diameter

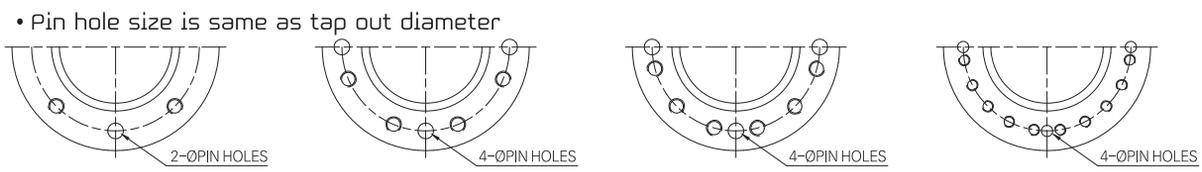


TYPE - A TYPE - B TYPE - C TYPE - D



## Dimension >>>

UNIT : mm

| MODEL \ DIM | BASE PART | | | | | | | EXTERNAL PART | | | | | | | | INPUT SHAFT PART | | | HAND WHEEL |
|---|---|---|---|---|---|---|---|---|---|---|---|---|---|---|---|---|---|---|---|
| | TYPE | FLANGE | ØD1 | P.C.D ØD2 | P.C.D N-H-DP | ØD3 | H | H1 | H2 | K | K1 | K2 | K3 | L | L1 | L2 | ØPD | KEY | |
| SBWG-00DC-1S | A | F-12 | 85 | 125 | 4-M12-18 | 165 | 2 | 69.5 | 214 | 86.5 | 43 | 53.6 | 259 | 154 | 166 | 29 | 21 | 6X6 | 300 |
| SBWG-01DC-1S | | F-14 | 100 | 140 | 4-M16-24 | 190 | | 83 | 240 | 96 | 53 | 65 | 288 | 163 | 175 | | | | 400 |
| SBWG-02DC-1S | | F-16 | 130 | 165 | 4-M20-30 | 220 | | 95.5 | 285 | 111.5 | 58 | 75.5 | 329 | 184 | 190.5 | 34 | 26 | 8X7 | 500 |
| SBWG-03DC-1S | B | F-16 (F-20) | 160 | 205 | 8-M16-24 | 250 | 3 | 109 | 313.5 | 118 | 61 | 87 | 349 | 194 | 200.5 | 34 | 26 | 8X7 | 560 |
| SBWG-35DC-1S | | F-25 | 200 | 254 | 8-M16-24 | 300 | | 127.5 | 357.5 | 135 | 72 | 100 | 367 | 210 | 218.5 | | | | |
| SBWG-04DC-1S | | F-25 | 200 | 254 | 8-M16-24 | 300 | | 147 | 417.5 | 147 | 73 | 120 | 413 | 247 | 250 | 34 | 32 | 10X8 | 630 |
| * SBWG-05DC-1S | | F-30 | 230 | 298 | 8-M20-30 | 350 | | 174 | 469.5 | 155 | 78 | 141 | 443 | 257 | 260 | | | | 710 |
| SBWG-55DC-1S | | | | | | 350 | | 196 | 516.5 | 162 | 80 | 144 | 463 | 277 | 280 | | | | |
| SBWG-06DC-1S | | F-35 | 260 | 356 | 8-M30-45 | 415 | | 222 | 621 | 200 | 109 | 173 | 552 | 316 | 349 | 44 | 38 | 12X8 | 800 |
| SBWG-07DC-1S | | F-40 | 300 | 406 | 8-M36-55 | 475 | | 272.5 | 723 | 227 | 116 | 209 | 607 | 350.5 | 384 | | | | 900 |
| SBWG-75DC-1S | C | F-48 | 370 | 483 | 12-M36-55 | 560 | 5 | 313 | 860 | 246 | 120 | 220 | 721 | 389.5 | 485 | 58 | 50 | 16X10 | 1000 |
| SBWG-08DC-1S | | | | | | 560 | | 366 | 968 | 254 | 125 | 245 | 756 | 424.5 | 520 | | | | |
| SBWG-09DC-1S | D | F-60 | 470 | 603 | 20-M36-55 | 700 | 5 | 435.5 | 1107.5 | 284 | 138 | 270 | 796 | 465 | 560 | 58 | 50 | 16X10 | 1000 |
| SBWG-10DC-1S | | | | | | 800 | | 498 | 1191 | 352 | 164 | 330 | 927 | 550 | 691 | | | | |

Size and component specification in this catalogue are subject to change without prior notice for quality improvement.
* Mark has been changed and updated.

## Feature >>>

- All mounting bases conform to ISO 5210/1 standards.
- All castings are ductile iron, Class 65-45-12 excellent strength and impact resistance.
- Worm gear material is available in two option.
  - Ductile iron,Class 80-55-06
  - Aluminum bronze, B148-C95800
- Worm is 1045 heat treated Carbon steel.
- Removable splined bushing to permit accurate positioning between gear drive and valve stem.
- Options include hand wheels, chain and etc.

### Bushing Type

Splines permit accurate alignment of valve stem key.

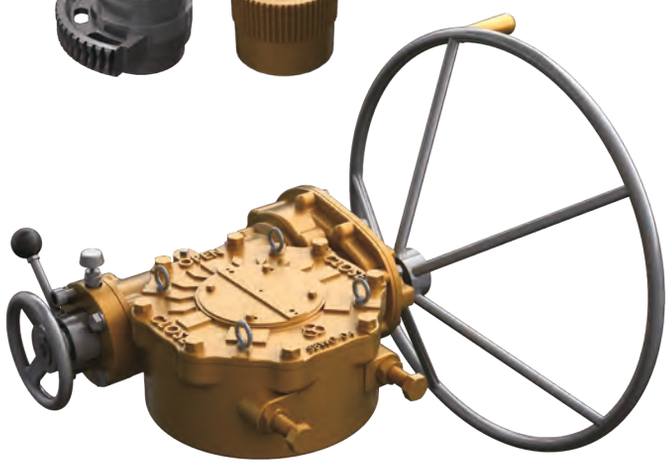

Global Leader SAMBO SPIRAL BEVEL GEAR ACTUATORS

The World's Highest Quality!

## Manual Override Operation >>>

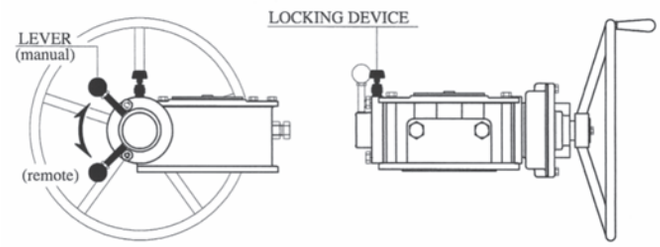


- Somewhere it should be noted that these units have been specifically developed for use with pneumatic and Hydrauric Actuators providing a positive mechanical means of manual operation.

1. Pull up on locking device knob.
2. Rotate lever to "Manual" position.
3. Handwheel can now be operated.
   Note : pneumatic actuator is now fully disengaged.
4. The lever must be placed back in "Remote" position for pneumatic operation.

### CAUTION

- Operate to check the position of manual and remote.
- When convert "manual" position,control the position of worm shaft and then operate to accord with worm gear.

## Selection Chart for Manual Operation >>>

| SIZE / MODEL | GEAR RATIO | MAX. STEM ACCEPTANCE | BASE MOUNTING OPTION & STANDARD | MAX. TORQUE CAPACITY | | WEIGHT |
|---|---|---|---|---|---|---|
| | | | | N–m | Ft . lbf | Kg |
| SBWG–00DC–1S | 67 : 1 | 36 (10X8) | F–10 , F–12 | 980 | 723 | 12 |
| SBWG–01DC–1S | 75 : 1 | 46 (14X9) | F–10 , F–12 , F–14 | 1600 | 1180 | 15 |
| SBWG–02DC–1S | 107 : 1 | 60 (18X11) | F–12 , F–14 , F–16 | 2500 | 1844 | 25 |
| SBWG–03DC–1S | 117 : 1 | 75 (20X12) | F–14 , F–16 , (F–20) | 3800 | 2803 | 33 |
| SBWG–35DC–1S | 118 : 1 | 80 (22X14) | F–16 , (F–20) , F–25 | 5600 | 4130 | 50 |
| SBWG–04DC–1S | 149.3 : 1 | 95 (25X14) | F–16 , (F–20) , F–25 | 9600 | 7081 | 66 |
| * SBWG–05DC–1S | 160 : 1 | 115 (32X18) | (F–20), F–25 , F–30 | 14400 | 10621 | 88 |
| SBWG–55DC–1S | 165 : 1 | 125(32X18) | F–25 , F–30 | 21150 | 15599 | 107 |
| SBWG–06DC–1S | 232 : 1 | 140 (36X20) | F–25 , F–30 , F–35 | 29520 | 21773 | 175 |
| SBWG–07DC–1S | 247 : 1 | 180 (45X25) | F–30 , F–35 , F–40 | 45000 | 33190 | 271 |
| SBWG–75DC–1S | 290 : 1 | 210 (50X28) | F–35 , F–40 , F–48 | 73350 | 54100 | 422 |
| SBWG–08DC–1S | 290 : 1 | 250 (56X32) | F–40 , F–48 | 108900 | 80321 | 545 |
| SBWG–09DC–1S | 286 : 1 | 280 (63X32) | F–48 , F–60 | 178000 | 131286 | 902 |
| SBWG–10DC–1S | 277 : 1 | 320 (70X36) | F–60 | 253000 | 186600 | 1426 |

Size and component specification in this catalogue are subject to change without prior notice for quality improvement.
* Mark has been changed and updated.

# DECLUTCH GEAR

## Horizontal Input with Triple Reduction Gear Attachment

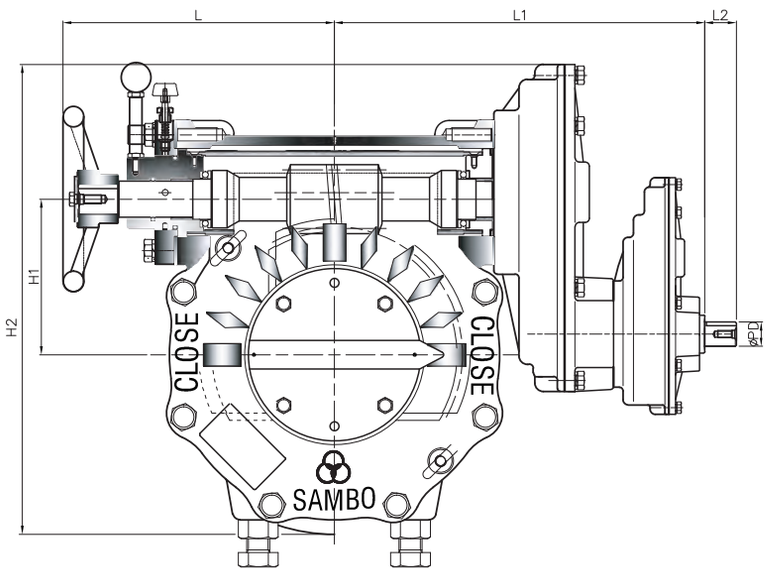


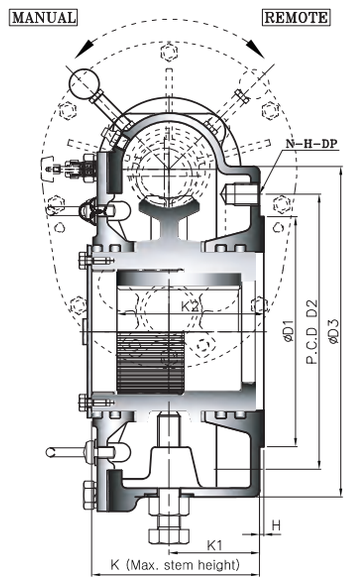


• Pin hole size is same as tap out diameter

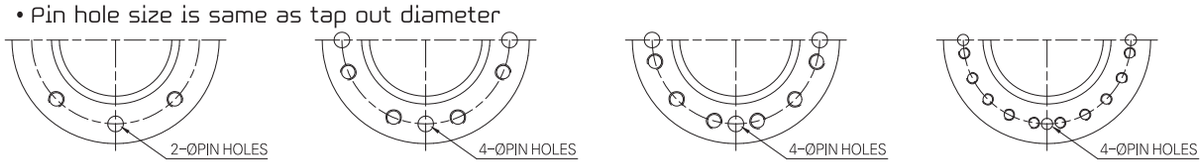


TYPE - A TYPE - B TYPE - C TYPE - D



## Dimension >>>

UNIT : mm

| MODEL \ DIM | BASE PART | | | | | | | EXTERNAL PART | | | | | | | INPUT SHAFT PART | | | HAND WHEEL |
|---|---|---|---|---|---|---|---|---|---|---|---|---|---|---|---|---|---|---|
| | TYPE | FLANGE | ØD1 | P.C.D ØD2 | P.C.D N-H-DP | ØD3 | H | H1 | H2 | K | K1 | K2 | L | L1 | L2 | ØPD | KEY | |
| SBWG-00DC-2SD | A | F-12 | 85 | 125 | 4-M12-18 | 165 | 2 | 69.5 | 214 | 86.5 | 43 | 53.6 | 154 | 261 | 29 | 21 | 6X6 | 300 |
| SBWG-01DC-2SD | | F-14 | 100 | 140 | 4-M16-24 | 190 | | 83 | 240 | 96 | 53 | 65 | 163 | 270 | | | | 300 |
| SBWG-02DC-2SD | | F-16 | 130 | 165 | 4-M20-30 | 220 | | 95.5 | 285 | 111.5 | 58 | 75.5 | 184 | 288.5 | 29 | 21 | 6X6 | 300 |
| SBWG-03DC-2SD | B | F-16 (F-20) | 160 | 205 | 8-M16-24 | 250 | 3 | 109 | 313.5 | 118 | 61 | 87 | 194 | 298.5 | 29 | 21 | 6X6 | 400 |
| SBWG-35DC-2SD | | F-25 | 200 | 254 | 8-M16-24 | 300 | | 127.5 | 357.5 | 135 | 72 | 100 | 210 | 316.5 | | | | |
| SBWG-04DC-2SD | | F-25 | 200 | 254 | 8-M16-24 | 300 | | 147 | 417.5 | 147 | 73 | 120 | 247 | 352.5 | 34 | 26 | 8X7 | 500 |
| * SBWG-05DC-2SD | | F-30 | 230 | 298 | 8-M20-30 | 350 | | 174 | 469.5 | 155 | 78 | 141 | 257 | 362.5 | | | | 560 |
| SBWG-55DC-2SD | | | | | | 350 | | 196 | 516.5 | 162 | 80 | 144 | 277 | 382.5 | | | | |
| SBWG-06DC-2SD | | F-35 | 260 | 356 | 8-M30-45 | 415 | | 222 | 621 | 200 | 109 | 173 | 316 | 509 | 34 | 32 | 10X8 | 630 |
| SBWG-07DC-2SD | | F-40 | 300 | 406 | 8-M36-55 | 475 | | 272.5 | 723 | 227 | 116 | 209 | 350.5 | 524 | | | | 710 |
| SBWG-75DC-2SD | C | F-48 | 370 | 483 | 12-M36-55 | 560 | 5 | 313 | 860 | 246 | 120 | 220 | 389.5 | 640 | 44 | 38 | 12X8 | 800 |
| SBWG-08DC-2SD | | | | | | 560 | | 366 | 968 | 254 | 125 | 245 | 424.5 | 676 | | | | 900 |
| SBWG-09DC-2SD | D | F-60 | 470 | 603 | 20-M36-55 | 700 | 5 | 435.5 | 1107.5 | 284 | 138 | 270 | 465 | 716 | 44 | 38 | 12X8 | 900 |
| SBWG-10DC-2SD | | | | | | 800 | | 498 | 1191 | 352 | 164 | 330 | 550 | 860 | 58 | 50 | 16X10 | 1000 |

Size and component specification in this catalogue are subject to change without prior notice for quality improvement.
* Mark has been changed and updated.

## Feature >>>

- All mounting bases conform to ISO 5210/1 standards.
- All castings are ductile iron, Class 65-45-12 excellent strength and impact resistance.
- Worm gear material is available in two option.
  - Ductile iron,Class 80-55-06
  - Aluminum bronze, B148-C95800
- Worm is 1045 heat treated Carbon steel.
- Removable splined bushing to permit accurate positioning between gear drive and valve stem.
- Options include hand wheels, chain and etc.

### Bushing Type

Splines permit accurate alignment of valve stem key.

## Manual Override Operation >>>

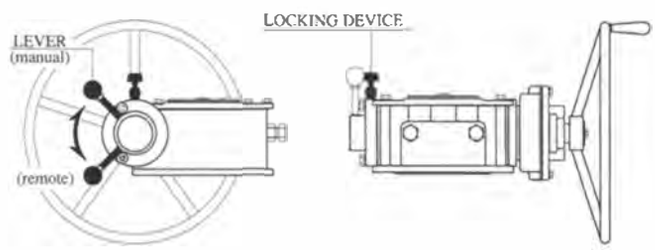


- Somewhere it should be noted that these units have been specifically developed for use with pneumatic and Hydrauric Actuators providing a positve mechanical means of manual operation.

1. Pull up on locking device knob.
2. Rotate lever to "Manual" position.
3. Handwheel can now be operated.
   Note : pneumatic actuator is now fully disengaged.
4. The lever must be placed back in "Remote" position for pneumatic operation.

### CAUTION

- Operate to check the position of manual and remote.
- When convert "manual" position,control the position of worm shaft and then operate to accord with worm gear.

## Selection Chart for Manual Operation >>>

| SIZE / MODEL | MAX. GEAR RATIO (Changeable) | MAX. STEM ACCEPTANCE | BASE MOUNTING OPTION & STANDARD | MAX. TORQUE CAPACITY | | WEIGHT |
|---|---|---|---|---|---|---|
| | | | | N-m | Ft . lbf | Kg |
| SBWG-00DC-2SD | 266 : 1 | 36 (10X8) | F-10 , F-12 | 980 | 723 | 14 |
| SBWG-01DC-2SD | 298 : 1 | 46 (14X9) | F-10 , F-12 , F-14 | 1600 | 1180 | 17 |
| SBWG-02DC-2SD | 429 : 1 | 60 (18X11) | F-12 , F-14 , F-16 | 2500 | 1844 | 27 |
| SBWG-03DC-2SD | 467 : 1 | 75 (20X12) | F-14 , F-16 , (F-20) | 3800 | 2803 | 35 |
| SBWG-35DC-2SD | 471 : 1 | 80 (22X14) | F-16 , (F-20) , F-25 | 5600 | 4130 | 56 |
| SBWG-04DC-2SD | 958 : 1 | 95 (25X14) | F-16 , (F-20) , F-25 | 9600 | 7081 | 71 |
| * SBWG-05DC-2SD | 1026 : 1 | 115 (32X18) | (F-20), F-25 , F-30 | 14400 | 10621 | 93 |
| SBWG-55DC-2SD | 1061 : 1 | 125 (32X18) | F-25 , F-30 | 21150 | 15599 | 112 |
| SBWG-06DC-2SD | 2088 : 1 | 140 (36X20) | F-25 , F-30 , F-35 | 29520 | 21773 | 188 |
| SBWG-07DC-2SD | 2218 : 1 | 180 (45X25) | F-30 , F-35 , F-40 | 45000 | 33190 | 284 |
| SBWG-75DC-2SD | 4645 : 1 | 210 (50X28) | F-35 , F-40 , F-48 | 73350 | 54100 | 450 |
| SBWG-08DC-2SD | 4645 : 1 | 250 (56X32) | F-40 , F-48 | 108900 | 80321 | 573 |
| SBWG-09DC-2SD | 4574 : 1 | 280 (63X32) | F-48 , F-60 | 178000 | 131286 | 929 |
| SBWG-10DC-2SD | 6929.4: 1 | 320 (70X36) | F-60 | 253000 | 186600 | 1464 |

Size and component specification in this catalogue are subject to change without prior notice for quality improvement.
* Mark has been changed and updated.

# DECLUTCH GEAR Pneumatic Actuator
## Horizontal Input

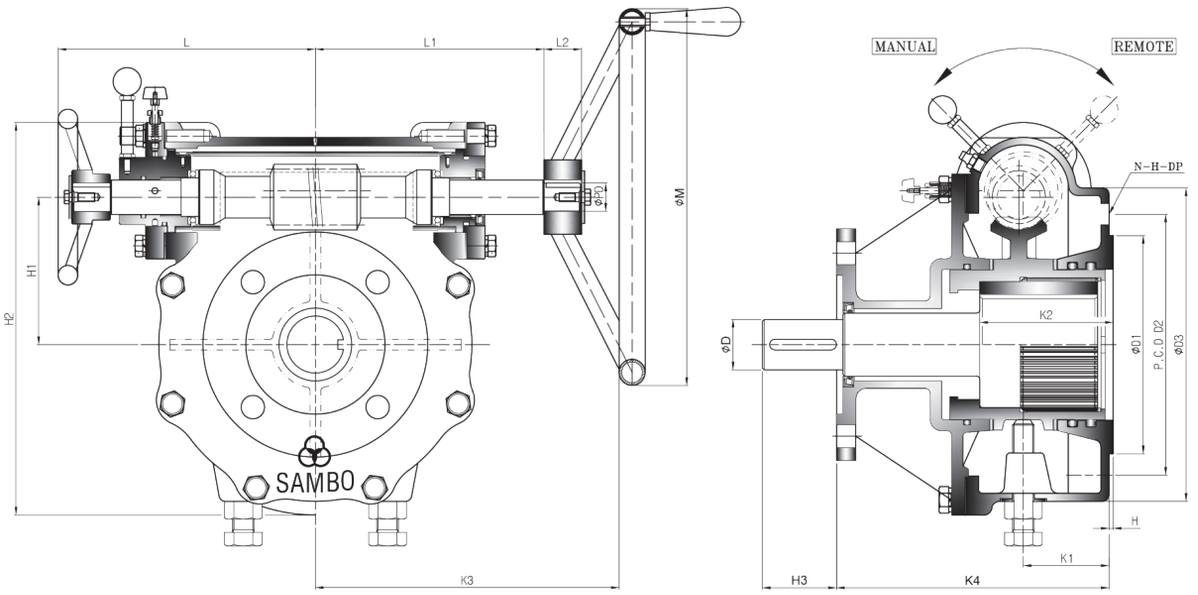


• Pin hole size is same as tap out diameter

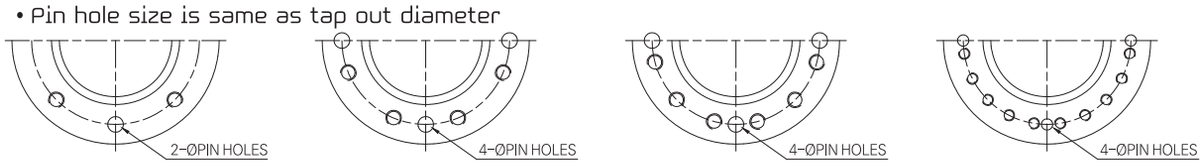


TYPE - A TYPE - B TYPE - C TYPE - D

## Dimension >>>

UNIT : mm

| MODEL \ DIM | BASE PART | | | | | | | EXTERNAL PART | | | | | | | | INPUT SHAFT PART | | | HAND WHEEL |
|---|---|---|---|---|---|---|---|---|---|---|---|---|---|---|---|---|---|---|---|
| | TYPE | FLANGE | ØD1 | P.C.D ØD2 | P.C.D N-H-DP | ØD3 | H | H1 | H2 | K1 | K2 MAX | K3 | K4 | L | L1 | L2 | ØPD | KEY | |
| * SBWG-BFDCM | A | F-07 | 55 | 70 | 4-M8-12 | 110 | 2 | 38.5 | 132 | 38 | 50 | 150 | 131 | 104 | 97 | 24 | 16 | 6X6 | 200 |
| * SBWG-0DCM | | F-10 | 70 | 102 | 4-M10-15 | 135 | | 53.5 | 159.5 | 38 | 60 | 177 | 133 | 111.5 | 106.5 | | | | 250 |
| * SBWG-00DCM | | F-12 | 85 | 125 | 4-M12-18 | 165 | | 69.5 | 198.5 | 43 | 70 | 230 | 149.5 | 122 | 138 | 29 | 21 | 6X6 | 300 |
| * SBWG-01DCM | | F-14 | 100 | 140 | 4-M16-24 | 190 | | 83 | 224.5 | 53 | 80 | 260 | 174 | 131 | 147 | | | | 400 |
| * SBWG-02DCM | | F-16 | 130 | 165 | 4-M20-30 | 220 | | 95.5 | 262.5 | 58 | 90 | 274 | 191.5 | 148 | 139 | 34 | 26 | 8X7 | 500 |
| * SBWG-03DCM | B | F-16 (F-20) | 160 | 205 | 8-M16-24 | 250 | 3 | 109 | 291 | 61 | 100 | 297 | 206 | 158 | 149 | 34 | 26 | 8X7 | 560 |
| * SBWG-35DCM | | F-25 | 200 | 254 | 8-M16-24 | 300 | | 127.5 | 340 | 72 | 110 | 342 | 225 | 178 | 194 | | | | |
| * SBWG-04DCM | | F-25 | 200 | 254 | 8-M16-24 | 300 | | 147 | 385.5 | 73 | 120 | 370 | 242 | 247 | 205.5 | 34 | 32 | 10X8 | 630 |
| * SBWG-05DCM | | F-30 | 230 | 298 | 8-M20-30 | 350 | | 174 | 437.5 | 78 | 130 | 400 | 247.5 | 257 | 215.5 | | | | 710 |
| * SBWG-55DCM | | | | | | 350 | | 196 | 484.5 | 80 | 170 | 420 | 256 | 277 | 235.5 | | | | |
| * SBWG-06DCM | | F-35 | 260 | 356 | 8-M30-45 | 415 | | 222 | 558.5 | 109 | 190 | 489 | 302 | 316 | 286 | 44 | 38 | 12X8 | 800 |
| * SBWG-07DCM | | F-40 | 300 | 406 | 8-M36-55 | 475 | | 272.5 | 660.5 | 116 | 200 | 538 | 349 | 350.5 | 315 | | | | 900 |
| * SBWG-75DCM | C | F-48 | 370 | 483 | 12-M36-55 | 560 | 5 | 313 | 776 | 120 | 210 | 617 | 430 | 389.5 | 381 | 58 | 50 | 16X10 | 1000 |
| * SBWG-08DCM | | | | | | 560 | | 366 | 884 | 125 | 220 | 652 | 439 | 424.5 | 416 | | | | |
| * SBWG-09DCM | D | F-60 | 470 | 603 | 20-M36-55 | 700 | 5 | 435.5 | 1023.5 | 138 | 230 | 692 | 467 | 465 | 456 | 58 | 50 | 16X10 | 1000 |
| * SBWG-10DCM | | | | | | 800 | | 498 | 1191 | 352 | 240 | 814 | 562 | 550 | 614 | | | | |

Size and component specification in this catalogue are subject to change without prior notice for quality improvement.
* Mark has been changed and updated.

## Feature >>>

- All mounting bases conform to ISO 5210/1 standards.
- All castings are ductile iron, Class 65-45-12 excellent strength and impact resistance.
- Worm gear material is available in two option.
  - Ductile iron,Class 80-55-06
  - Aluminum bronze, B148-C95800
- Worm is 1045 heat treated Carbon steel.
- Removable splined bushing to permit accurate positioning between gear drive and valve stem.
- Options include hand wheels, chain and etc.

### Bushing Type

Splines permit accurate alignment of valve stem key.

## Manual Override Operation >>>

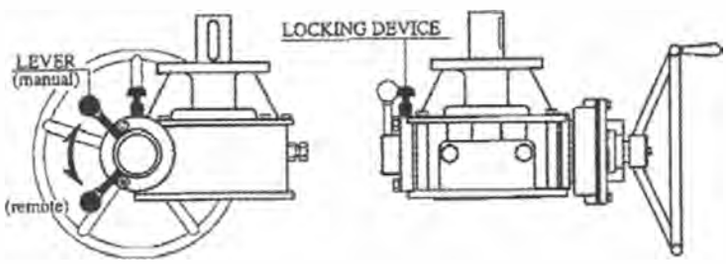


- Somewhere it should be noted that these units have been specifically developed for use with pneumatic and Hydrauric Actuators providing a positve mechanical means of manual operation.

1. Pull up on locking device knob.
2. Rotate lever to "Manual" position.
3. Handwheel can now be operated.
   Note : pneumatic actuator is now fully disengaged.
4. The lever must be placed back in "Remote" position for pneumatic operation.

### CAUTION

- Operate to check the position of manual and remote.
- When convert "manual" position,control the position of worm shaft and then operate to accord with worm gear.

## Selection Chart for Manual Operation >>>

| SIZE / MODEL | GEAR RATIO | MAX. STEM ACCEPTANCE | BASE MOUNTING OPTION & STANDARD | PNEUMATIC PART | | | MAX. TORQUE CAPACITY | | WEIGHT |
|---|---|---|---|---|---|---|---|---|---|
| | | | | ØD | H3 | MOUNTING OPTION | N-m | Ft . lbf | Kg |
| * SBWG-8FDCM | 32 : 1 | 20 (6X6) | F-05, F-07 | Ø22 | 50 | F-05, F-07 | 320 | 236 | 5 |
| * SBWG-0DCM | 36 : 1 | 28 (8X7) | F-07 , F-10 | Ø35 | 50 | F-10, F-07 | 680 | 502 | 7 |
| * SBWG-00DCM | 38 : 1 | 36 (10X8) | F-10 , F-12 | Ø45 | 60 | F-12, F-10 | 980 | 723 | 11 |
| * SBWG-01DCM | 43 : 1 | 46 (14X9) | F-10 , F-12 , F-14 | Ø55 | 75 | F-14, F-12, F-10 | 1600 | 1180 | 18 |
| * SBWG-02DCM | 46 : 1 | 60 (18X11) | F-12 , F-14 , F-16 | Ø65 | 90 | F-16, F-14, F-12 | 2500 | 1844 | 29 |
| * SBWG-03DCM | 50 : 1 | 75 (20X12) | F-14 , F-16 , (F-20) | Ø70 | 90 | F-16, F-14, F-12 | 3800 | 2803 | 45 |
| * SBWG-35DCM | 52 : 1 | 80 (22X14) | F-16 , (F-20) , F-25 | Ø80 | 90 | F-25, (F-20), F-16, F-14 | 5600 | 4130 | 63 |
| * SBWG-04DCM | 56 : 1 | 95 (25X14) | F-16 , (F-20) , F-25 | Ø90 | 90 | F-25, (F-20), F-16 | 9600 | 7081 | 86 |
| * SBWG-05DCM | 60 : 1 | 115 (32X18) | (F-20), F-25 , F-30 | Ø110 | 145 | F-30, F-25, (F-20) | 14400 | 10621 | 120 |
| * SBWG-55DCM | 62 : 1 | 125 (32X18) | F-25 , F-30 | Ø140 | 145 | F-30, F-25, (F-20) | 21150 | 15599 | 169 |
| * SBWG-06DCM | 64 : 1 | 140 (36X20) | F-25 , F-30 , F-35 | Ø160 | 150 | F-35, F-30, F-25 | 29520 | 21773 | 250 |
| * SBWG-07DCM | 68 : 1 | 180 (45X25) | F-30 , F-35 , F-40 | Ø180 | 180 | F-40, F-35, F-30, F-25 | 45000 | 33190 | 365 |
| * SBWG-75DCM | 65 : 1 | 210 (50X28) | F-35 , F-40 , F-48 | Ø240 | 250 | F-48, F-40, F-35 | 73350 | 54100 | 558 |
| * SBWG-08DCM | 65 : 1 | 250 (56X32) | F-40 , F-48 | Ø250 | 280 | F-48, F-40, F-35 | 108900 | 80321 | 681 |
| * SBWG-09DCM | 64 : 1 | 280 (63X32) | F-48 , F-60 | Ø260 | 300 | F-60, F-48 | 178000 | 131286 | 1038 |
| * SBWG-10DCM | 62 : 1 | 320 (70X36) | F-60 | Ø320 | 340 | F-60 | 253000 | 186600 | 1665 |

Size and component specification in this catalogue are subject to change without prior notice for quality improvement.
* Mark has been changed and updated.

# DECLUTCH GEAR Pneumatic Actuator

## Horizontal Input with Single Reduction Gear Attachment

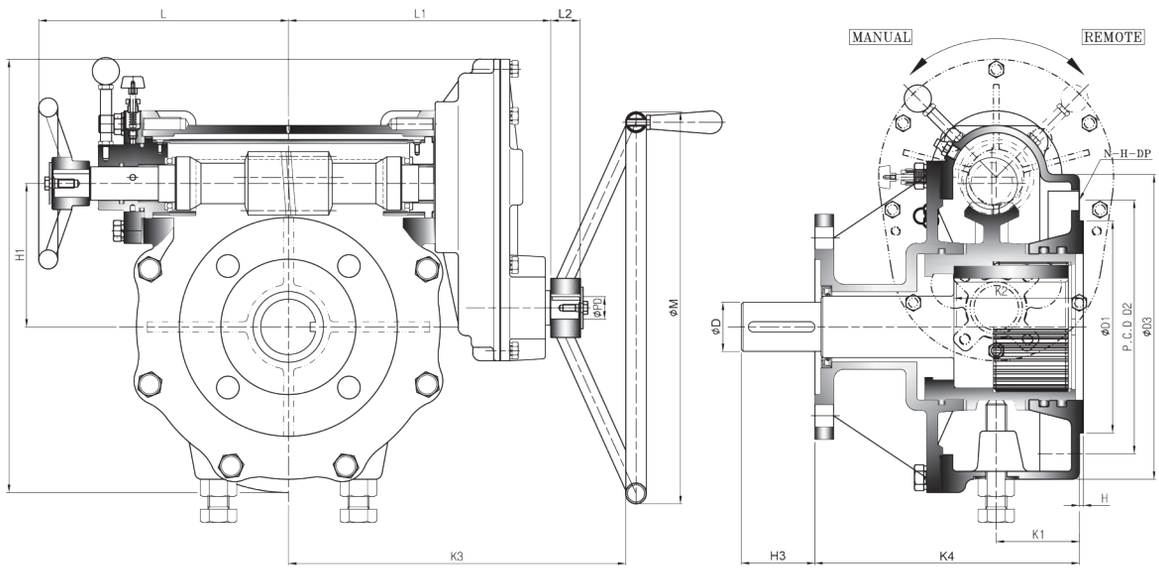


• Pin hole size is same as tap out diameter

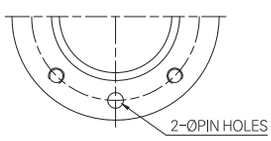


TYPE - A

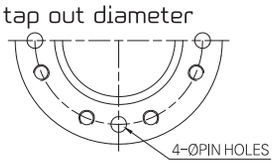


TYPE - B

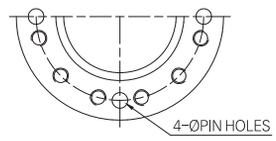


TYPE - C

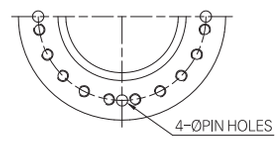


TYPE - D

Worm Gear

## Dimension >>>

UNIT : mm

| DIM / MODEL | BASE PART | | | | | | | EXTERNAL PART | | | | | | | | INPUT SHAFT PART | | | HAND WHEEL |
|---|---|---|---|---|---|---|---|---|---|---|---|---|---|---|---|---|---|---|---|
| | TYPE | FLANGE | ØD1 | P.C.D ØD2 | P.C.D N-H-DP | ØD3 | H | H1 | H2 | K1 | K2 MAX | K3 | K4 | L | L1 | L2 | ØPD | KEY | |
| * SBWG-00DCM-1S | A | F-12 | 85 | 125 | 4-M12-18 | 165 | 2 | 69.5 | 210 | 43 | 70 | 259 | 149.5 | 154 | 166 | 29 | 21 | 6X6 | 300 |
| * SBWG-01DCM-1S | | F-14 | 100 | 140 | 4-M16-24 | 190 | | 87 | 235.5 | 53 | 80 | 288 | 174 | 163 | 175 | | | | 400 |
| * SBWG-02DCM-1S | | F-16 | 130 | 165 | 4-M20-30 | 220 | | 95.5 | 282 | 58 | 90 | 329 | 191.5 | 184 | 190.5 | 34 | 26 | 8X7 | 500 |
| * SBWG-03DCM-1S | B | F-16 (F-20) | 160 | 205 | 8-M16-24 | 250 | 3 | 109 | 312 | 61 | 100 | 349 | 206 | 194 | 200.5 | 34 | 26 | 8X7 | 560 |
| * SBWG-35DCM-1S | | F-25 | 200 | 254 | 8-M16-24 | 300 | | 127.5 | 339.5 | 72 | 110 | 367 | 225 | 210 | 218.5 | | | | |
| * SBWG-04DCM-1S | | F-25 | 200 | 254 | 8-M16-24 | 300 | | 147 | 417.5 | 73 | 120 | 413 | 242 | 247 | 250 | 34 | 32 | 10X8 | 630 |
| * SBWG-05DCM-1S | | F-30 | 230 | 298 | 8-M20-30 | 350 | | 174 | 469.5 | 78 | 130 | 443 | 247.5 | 257 | 260 | | | | 710 |
| * SBWG-55DCM-1S | | | | | | 350 | | 196 | 516.5 | 80 | 170 | 463 | 256 | 277 | 280 | | | | |
| * SBWG-06DCM-1S | | F-35 | 260 | 356 | 8-M30-45 | 415 | | 222 | 621 | 109 | 190 | 552 | 302 | 316 | 349 | 44 | 38 | 12X8 | 800 |
| * SBWG-07DCM-1S | | F-40 | 300 | 406 | 8-M36-55 | 475 | | 272.5 | 723 | 116 | 200 | 607 | 349 | 349 | 384 | | | | 900 |
| * SBWG-75DCM-1S | C | F-48 | 370 | 483 | 12-M36-55 | 560 | 5 | 313 | 860 | 120 | 210 | 721 | 430 | 389.5 | 485 | 58 | 50 | 16X10 | 1000 |
| * SBWG-08DCM-1S | | | | | | 560 | | 366 | 968 | 125 | 220 | 756 | 439 | 424.5 | 520 | | | | |
| * SBWG-09DCM-1S | D | F-60 | 470 | 603 | 20-M36-55 | 700 | 5 | 435.5 | 1107.5 | 138 | 230 | 796 | 467 | 465 | 560 | 58 | 50 | 16X10 | 1000 |
| * SBWG-10DCM-1S | | | | | | 800 | | 498 | 1191 | 352 | 240 | 927 | 562 | 550 | 691 | | | | |

Size and component specification in this catalogue are subject to change without prior notice for quality improvement.
* Mark has been changed and updated.

## Feature >>>

- All mounting bases conform to ISO 5210/1 standards.
- All castings are ductile iron, Class 65-45-12 excellent strength and impact resistance.
- Worm gear material is available in two option.
  - Ductile iron,Class 80-55-06
  - Aluminum bronze, B148-C95800
- Worm is 1045 heat treated Carbon steel.
- Removable splined bushing to permit accurate positioning between gear drive and valve stem.
- Options include hand wheels, chain and etc.

### Bushing Type

Splines permit accurate alignment of valve stem key.

## Manual Override Operation >>>

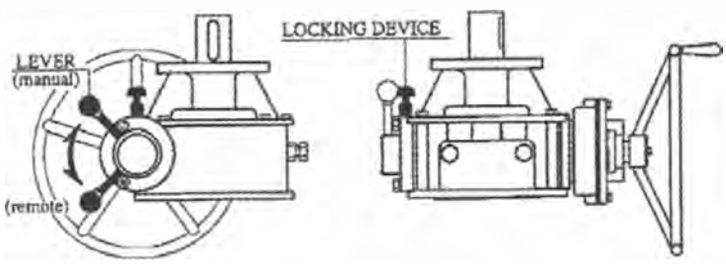


- Somewhere it should be noted that these units have been specifically developed for use with pneumatic and Hydrauric Actuators providing a positve mechanical means of manual operation.

1. Pull up on locking device knob.
2. Rotate lever to "Manual" position.
3. Handwheel can now be operated.
   Note : pneumatic actuator is now fully disengaged.
4. The lever must be placed back in "Remote" position for pneumatic operation.

### CAUTION

- Operate to check the position of manual and remote.
- When convert "manual" position,control the position of worm shaft and then operate to accord with worm gear.

## Selection Chart for Manual Operation >>>

| SIZE / MODEL | GEAR RATIO | MAX. STEM ACCEPTANCE | BASE MOUNTING OPTION & STANDARD | PNEUMATIC PART | | | MAX. TORQUE CAPACITY | | WEIGHT |
|---|---|---|---|---|---|---|---|---|---|
| | | | | ØD | H3 | MOUNTING OPTION | N-m | Ft . lbf | Kg |
| * SBWG-00DCM-1S | 67 : 1 | 36 (10X8) | F-10 , F-12 | Ø45 | 60 | F-12, F-10 | 980 | 723 | 13 |
| * SBWG-01DCM-1S | 75 : 1 | 46 (14X9) | F-10 , F-12 , F-14 | Ø55 | 75 | F-14, F-12, F-10 | 1600 | 1180 | 21 |
| * SBWG-02DCM-1S | 107 : 1 | 60 (18X11) | F-12 , F-14 , F-16 | Ø65 | 90 | F-16, F-14, F-12 | 2500 | 1844 | 32 |
| * SBWG-03DCM-1S | 117 : 1 | 75 (20X12) | F-14 , F-16 , (F-20) | Ø70 | 90 | F-16, F-14, F-12 | 3800 | 2803 | 47 |
| * SBWG-35DCM-1S | 118 : 1 | 80 (22X14) | F-16 , (F-20) , F-25 | Ø80 | 90 | F-25, (F-20), F-16, F-14 | 5600 | 4130 | 66 |
| * SBWG-04DCM-1S | 149.3 : 1 | 95 (25X14) | F-16 , (F-20) , F-25 | Ø90 | 90 | F-25, (F-20), F-16 | 9600 | 7081 | 95 |
| * SBWG-05DCM-1S | 160 : 1 | 115 (32X18) | (F-20), F-25 , F-30 | Ø110 | 145 | F-30, F-25, (F-20) | 14400 | 10621 | 124 |
| * SBWG-55DCM-1S | 165 : 1 | 125 (32X18) | F-25 , F-30 | Ø140 | 145 | F-30, F-25, (F-20) | 21150 | 15599 | 173 |
| * SBWG-06DCM-1S | 232 : 1 | 140 (36X20) | F-25 , F-30 , F-35 | Ø160 | 150 | F-35, F-30, F-25 | 29520 | 21773 | 260 |
| * SBWG-07DCM-1S | 247 : 1 | 180 (45X25) | F-30 , F-35 , F-40 | Ø180 | 180 | F-40, F-35, F-30, F-25 | 45000 | 33190 | 375 |
| * SBWG-75DCM-1S | 290 : 1 | 210 (50X28) | F-35 , F-40 , F-48 | Ø240 | 250 | F-48, F-40, F-35 | 73350 | 54100 | 586 |
| * SBWG-08DCM-1S | 290 : 1 | 250 (56X32) | F-40 , F-48 | Ø250 | 280 | F-48, F-40, F-35 | 108900 | 80321 | 709 |
| * SBWG-09DCM-1S | 286 : 1 | 280 (63X32) | F-48 , F-60 | Ø260 | 300 | F-60, F-48 | 178000 | 131286 | 1110 |
| * SBWG-10DCM-1S | 277 : 1 | 320 (70X36) | F-60 | Ø320 | 340 | F-60 | 253000 | 186600 | 1782 |

Size and component specification in this catalogue are subject to change without prior notice for quality improvement.
* Mark has been changed and updated.

# DECLUTCH GEAR Pneumatic Actuator

## Horizontal Input with Double Reduction Gear Attachment

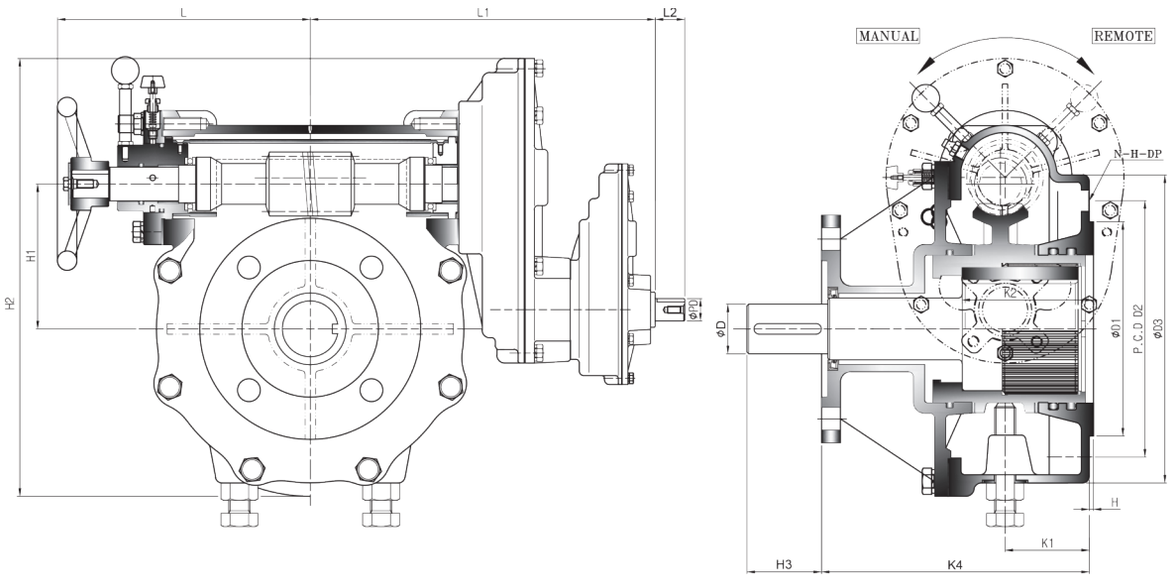


• Pin hole size is same as tap out diameter

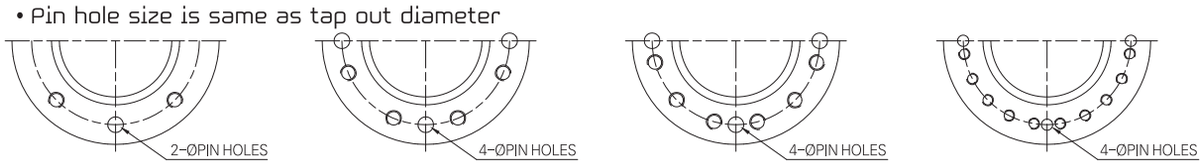


TYPE - A TYPE - B TYPE - C TYPE - D



## Dimension >>>

UNIT : mm

| DIM / MODEL | BASE PART | | | | | | | EXTERNAL PART | | | | | | | INPUT SHAFT PART | | | HAND WHEEL |
|---|---|---|---|---|---|---|---|---|---|---|---|---|---|---|---|---|---|---|
| | TYPE | FLANGE | ØD1 | P.C.D ØD2 | P.C.D N-H-DP | ØD3 | H | H1 | H2 | K1 | K2 | K4 | L | L1 | L2 | ØPD | KEY | |
| * SBWG-00DCM-2SD | A | F-12 | 85 | 125 | 4-M12-18 | 165 | 2 | 69.5 | 210 | 43 | 70 | 149.5 | 154 | 261 | 29 | 21 | 6X6 | 300 |
| * SBWG-01DCM-2SD | | F-14 | 100 | 140 | 4-M16-24 | 190 | | 87 | 235.5 | 53 | 80 | 174 | 163 | 270 | | | | 300 |
| * SBWG-02DCM-2SD | | F-16 | 130 | 165 | 4-M20-30 | 220 | | 95.5 | 282 | 58 | 90 | 191.5 | 184 | 288.5 | 29 | 21 | 6X6 | 300 |
| * SBWG-03DCM-2SD | B | F-16 (F-20) | 160 | 205 | 8-M16-24 | 250 | 3 | 109 | 312 | 61 | 100 | 206 | 194 | 298.5 | 29 | 21 | 6X6 | 400 |
| * SBWG-35DCM-2SD | | F-25 | 200 | 254 | 8-M16-24 | 300 | | 127.5 | 339.5 | 72 | 110 | 225 | 210 | 316.5 | | | | |
| * SBWG-04DCM-2SD | | F-25 | 200 | 254 | 8-M16-24 | 300 | | 147 | 417.5 | 73 | 120 | 242 | 247 | 352.5 | 34 | 26 | 8X7 | 500 |
| * SBWG-05DCM-2SD | | F-30 | 230 | 298 | 8-M20-30 | 350 | | 174 | 469.5 | 78 | 130 | 247.5 | 257 | 362.5 | | | | 560 |
| * SBWG-55DCM-2SD | | | | | | 350 | | 196 | 516.5 | 80 | 170 | 256 | 277 | 382.5 | | | | |
| * SBWG-06DCM-2SD | | F-35 | 260 | 356 | 8-M30-45 | 415 | | 222 | 621 | 109 | 190 | 302 | 316 | 509 | 34 | 32 | 10X8 | 630 |
| * SBWG-07DCM-2SD | | F-40 | 300 | 406 | 8-M36-55 | 475 | | 272.5 | 723 | 116 | 200 | 349 | 350.5 | 524 | | | | 710 |
| * SBWG-75DCM-2SD | C | F-48 | 370 | 483 | 12-M36-55 | 560 | 5 | 313 | 860 | 120 | 210 | 430 | 389.5 | 640 | 44 | 38 | 12X8 | 800 |
| * SBWG-08DCM-2SD | | | | | | 560 | | 366 | 968 | 125 | 220 | 439 | 424.5 | 676 | | | | 900 |
| * SBWG-09DCM-2SD | D | F-60 | 470 | 603 | 20-M36-55 | 700 | 5 | 435.5 | 1107.5 | 138 | 230 | 467 | 465 | 716 | 44 | 38 | 12X8 | 900 |
| * SBWG-10DCM-2SD | | | | | | 800 | | 498 | 1191 | 352 | 240 | 562 | 550 | 860 | 58 | 50 | 16X10 | 1000 |

Size and component specification in this catalogue are subject to change without prior notice for quality improvement.
* Mark has been changed and updated.

## Feature >>>

- All mounting bases conform to ISO 5210/1 standards.
- All castings are ductile iron, Class 65-45-12 excellent strength and impact resistance.
- Worm gear material is available in two option.
  - Ductile iron,Class 80-55-06
  - Aluminum bronze, B148-C95800
- Worm is 1045 heat treated Carbon steel.
- Removable splined bushing to permit accurate positioning between gear drive and valve stem.
- Options include hand wheels, chain and etc.

### Bushing Type

Splines permit accurate alignment of valve stem key.

## Manual Override Operation >>>

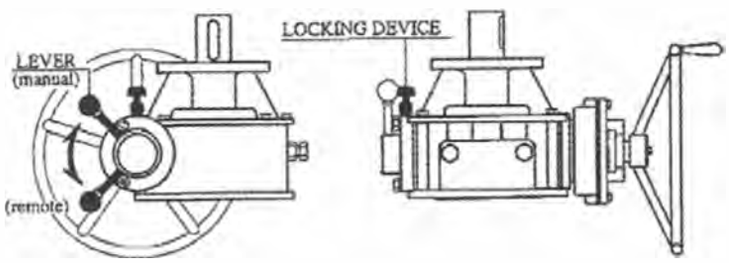


- Somewhere it should be noted that these units have been specifically developed for use with pneumatic and Hydrauric Actuators providing a positve mechanical means of manual operation.

1. Pull up on locking device knob.
2. Rotate lever to "Manual" position.
3. Handwheel can now be operated.
   Note : pneumatic actuator is now fully disengaged.
4. The lever must be placed back in "Remote" position for pneumatic operation.

### CAUTION

- Operate to check the position of manual and remote.
- When convert "manual" position,control the position of worm shaft and then operate to accord with worm gear.

## Selection Chart for Manual Operation >>>

| SIZE / MODEL | MAX. GEAR RATIO (Changeable) | MAX. STEM ACCEPTANCE | BASE MOUNTING OPTION & STANDARD | PNEUMATIC PART | | | MAX. TORQUE CAPACITY | | WEIGHT |
|---|---|---|---|---|---|---|---|---|---|
| | | | | ØD | H3 | MOUNTING OPTION | N-m | Ft . lbf | Kg |
| * SBWG-00DOM-2SD | 266 : 1 | 36 (10X8) | F-10 , F-12 | Ø45 | 60 | F-12, F-10 | 980 | 723 | 16 |
| * SBWG-01DOM-2SD | 298 : 1 | 46 (14X9) | F-10 , F-12 , F-14 | Ø55 | 75 | F-14, F-12, F-10 | 1600 | 1180 | 24 |
| * SBWG-02DOM-2SD | 429 : 1 | 60 (18X11) | F-12 , F-14 , F-16 | Ø65 | 90 | F-16, F-14, F-12 | 2500 | 1844 | 36 |
| * SBWG-03DOM-2SD | 467 : 1 | 75 (20X12) | F-14 , F-16 , (F-20) | Ø70 | 90 | F-16, F-14, F-12 | 3800 | 2803 | 51 |
| * SBWG-35DOM-2SD | 471 : 1 | 80 (22X14) | F-16 , (F-20) , F-25 | Ø80 | 90 | F-25, (F-20), F-16, F-14 | 5600 | 4130 | 70 |
| * SBWG-04DOM-2SD | 958 : 1 | 95 (25X14) | F-16 , (F-20) , F-25 | Ø90 | 90 | F-25, (F-20), F-16 | 9600 | 7081 | 101 |
| * SBWG-05DOM-2SD | 1026 : 1 | 115 (32X18) | (F-20), F-25 , F-30 | Ø110 | 145 | F-30, F-25, (F-20) | 14400 | 10621 | 130 |
| * SBWG-55DOM-2SD | 1061 : 1 | 125 (32X18) | F-25 , F-30 | Ø140 | 145 | F-30, F-25, (F-20) | 21150 | 15599 | 179 |
| * SBWG-06DOM-2SD | 2088 : 1 | 140 (36X20) | F-25 , F-30 , F-35 | Ø160 | 150 | F-35, F-30, F-25 | 29520 | 21773 | 275 |
| * SBWG-07DOM-2SD | 2218 : 1 | 180 (45X25) | F-30 , F-35 , F-40 | Ø180 | 180 | F-40, F-35, F-30, F-25 | 45000 | 33190 | 390 |
| * SBWG-75DOM-2SD | 4645 : 1 | 210 (50X28) | F-35 , F-40 , F-48 | Ø240 | 250 | F-48, F-40, F-35 | 73350 | 54100 | 627 |
| * SBWG-08DOM-2SD | 4645 : 1 | 250 (56X32) | F-40 , F-48 | Ø250 | 280 | F-48, F-40, F-35 | 108900 | 80321 | 750 |
| * SBWG-09DOM-2SD | 4574 : 1 | 280 (63X32) | F-48 , F-60 | Ø260 | 300 | F-60, F-48 | 178000 | 131286 | 1152 |
| * SBWG-10DOM-2SD | 6929.4 : 1 | 320 (70X36) | F-60 | Ø320 | 340 | F-60 | 253000 | 186600 | 2164 |

Size and component specification in this catalogue are subject to change without prior notice for quality improvement.
* Mark has been changed and updated.